CD RDS EON RECEIVER

KDC-8020R

SERVICE MANUAL

KENWOOD

©1994-7 PRINTED IN JAPAN
B51-6745-00(MC)2272

Mechanism extension cord for service W05-0481-00 (23P)

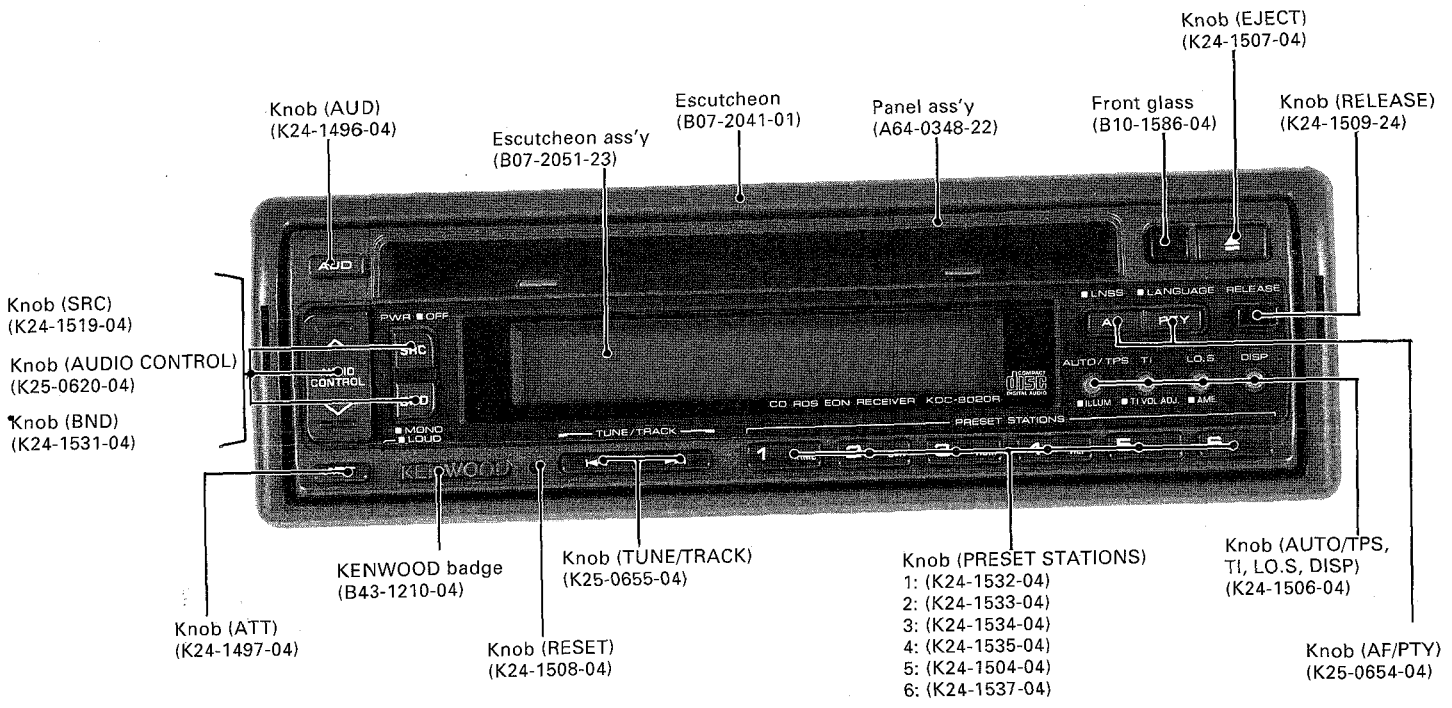

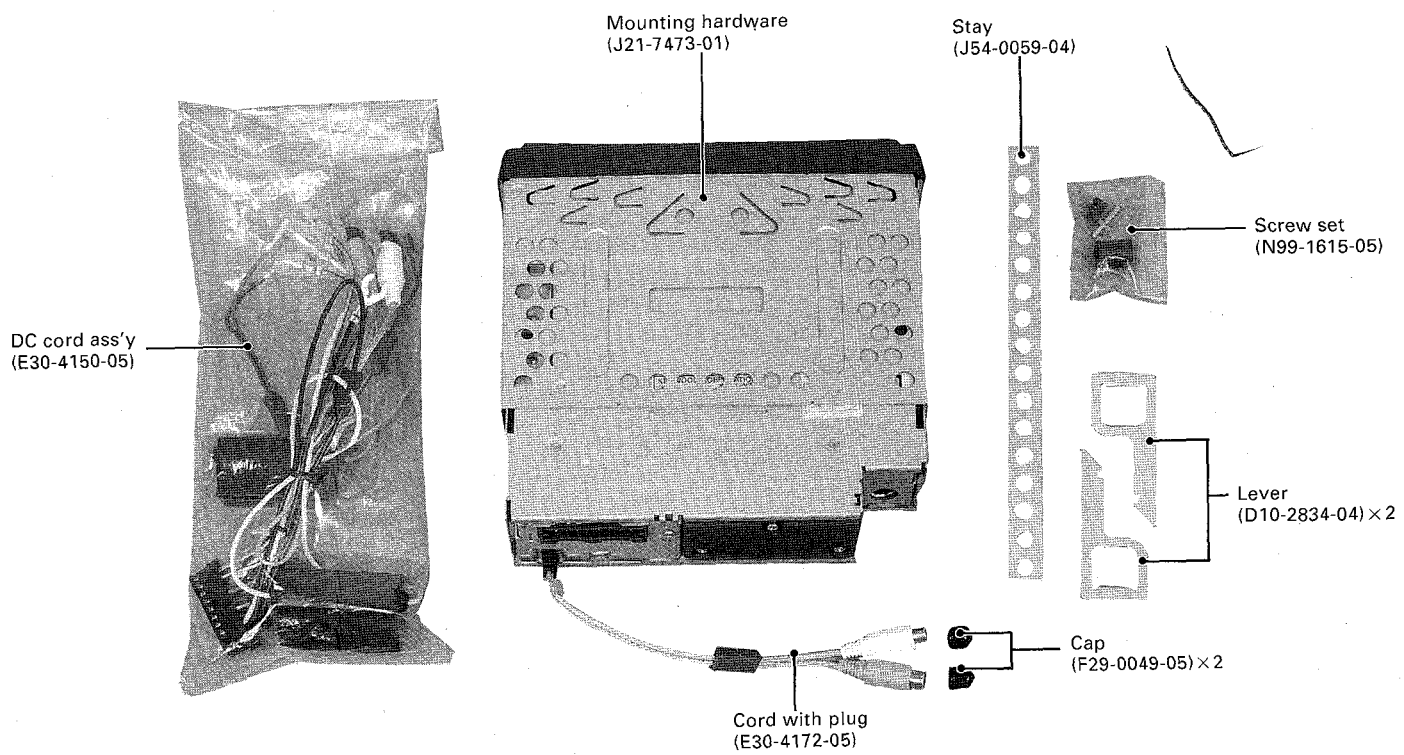

KDC-8020R

CONTENTS/CONNECTIONS

CONTENTS

CONNECTIONS 2
TROUBLESHOOTING GUIDE 3
BLOCK DIAGRAM 4
CIRCUIT DESCRIPTION 5
MECHANISM DESCRIPTION 36
ADJUSTMENT 42
ABGLEICH 44
PC BOARD (X25-7232-70 Component side view) 45
PC BOARD (X25-7232-70 Foil side view) 47
PC BOARD (X32-4010-00 Component side view) 49
PC BOARD (X32-4010-00 Foil side view) 51
SCHEMATIC DIAGRAM 53
ADJUSTMENT (MECHANISM) 65
EXPLODED VIEW (UNIT) 70
EXPLODED VIEW (PANEL) 71
PARTS LIST 72
SPECIFICATIONS ..... Back cover

CONNECTIONS

* Circled numbers indicate the procedures described in the Installation Procedure.

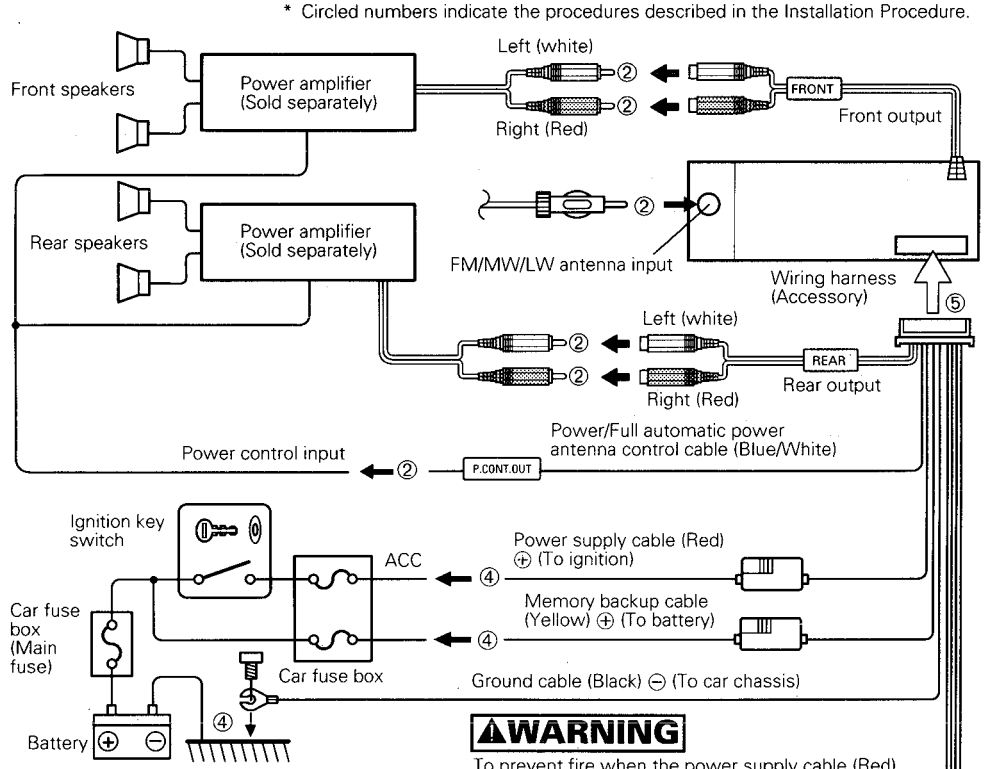

⚠CAUTION

When two speakers are connected to the system, be sure to connect both of them to the front output or rear output. In other words, do not connect the positive connector of the left speaker to the front output and the negative connector to the rear output.

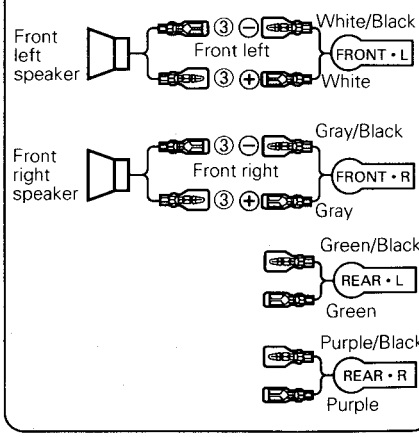

⚠WARNING

To prevent fire when the power supply cable (Red) or memory backup cable (Yellow) is short-circuited by coming into contact with the vehicle chassis (ground), only connect the power supply after making the fuse box connections.

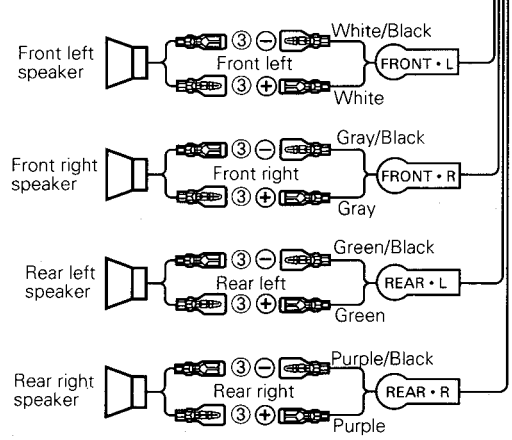

TROUBLESHOOTING GUIDE

Often, what appears to be a malfunction is due to user error. Before calling for service please consult the following table.

Symptom	Cause	Remedy
The power is not turned on.	The wiring harness fuse blows.	Check cables for shorts, then replace the fuse with one of with the same rating (shown on the case).
No sound or sound is low.	The volume level is minimum.	Raise the volume level.
	The fader or balance is set to one side.	Adjust the fader and balance.
	The input/output cable or wiring harness is connected incorrectly.	Connect the input/output cable or wiring harness correctly. See "Connections" (Page 42).
The unit does not work properly when a button is pressed.	The microcomputer malfunctions.	Press the Reset button on the front panel.
Sound quality is poor. (Sound distortion)	The volume level is too high.	Use the appropriate volume level.
	A speaker cable is pressed by a screw in the car.	Check the speaker cabling.
	A speaker cable is shared.	Connect the speaker output connectors to the separate speaker connectors.
Poor radio reception.	The car antenna is not extended.	Extend the antenna.
	The antenna control cable is not connected.	Connect the cable correctly. See "Connections (Page 42)"
When the ignition key switch is set to OFF, the memory contents disappear.	The Memory backup cable is not connected correctly.	Connect the cable correctly. See "Connections (Page 42)".
A Disc cannot be inserted.	Another disc has already been inserted.	Eject the previous disc before inserting another.
A disc is ejected immediately after being inserted.	The disc is upside down.	Insert the disc with the title side up.
	The disc is very dirty.	Check and, if possible, clean the disc See "Cleaning your discs" (Page 5).
As disc plays, you hear skipping.	The disc is dirty or damaged.	Check and, if possible, clean the disc See "Cleaning your discs" (Page 5).
Sound quality is poor.	The recording of the disc is poor.	Try playing another disc. If the sound is good, the fault was with the original disc.
	The disc is dirty or damaged.	Check and, if possible, clean the disc See "Cleaning your discs" (Page 5).
The specified disc is not played.	The player is set to RANDOM PLAY.	Turn off RANDOM PLAY.

KDC-8020R

BLOCK DIAGRAM

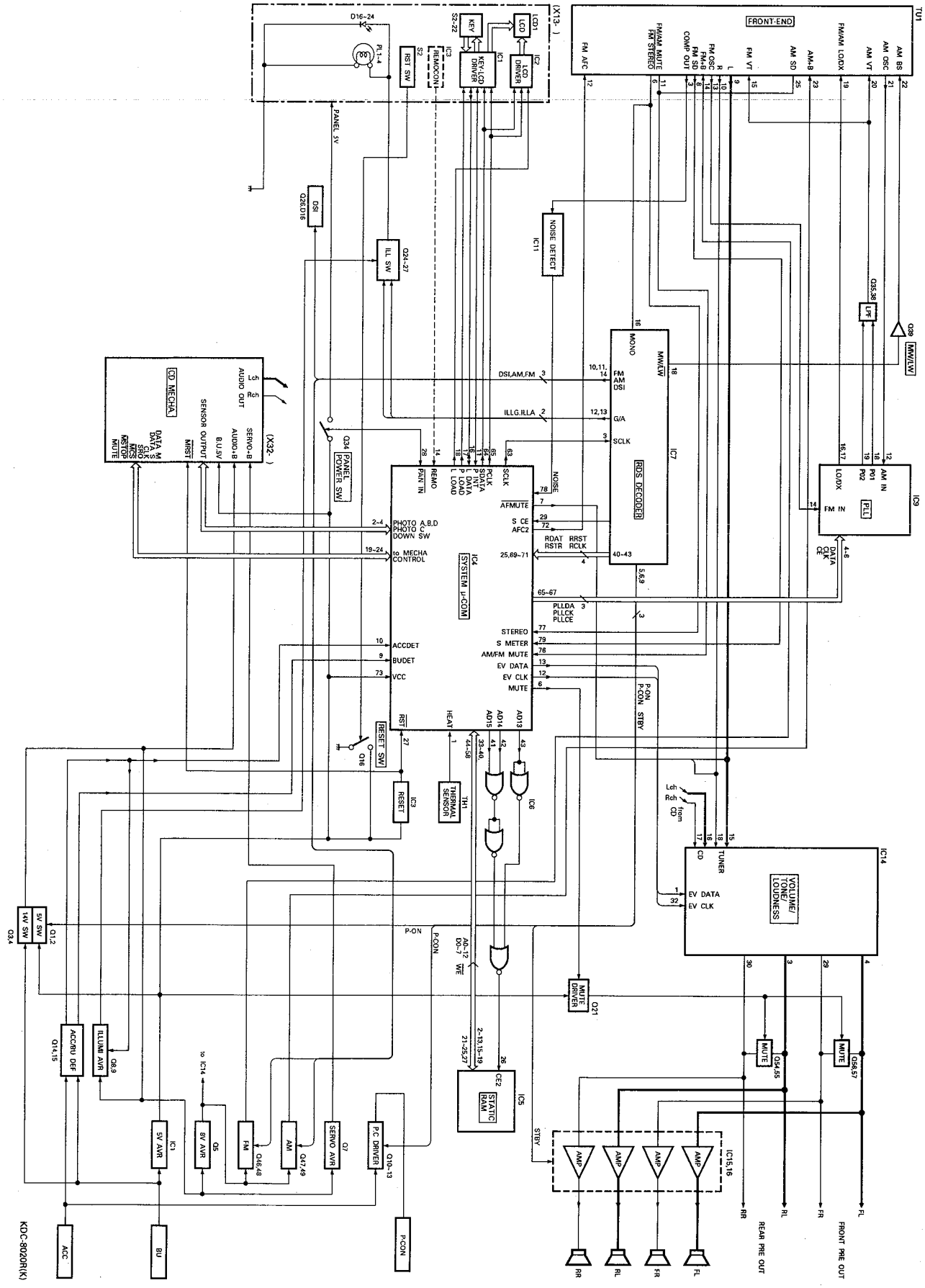

CIRCUIT DESCRIPTION

SWITCH UNIT (X13-8662-70)

Ref. No.	Device	Use and Function	Operation and Condition
IC1	MSM6606GS-VK	LCD drive with key scan function	Drive the LCD and key scan
IC2	MSM6544GS	LCD drive	Drive the LCD
IC3	RS-21	Remote control light sensor	Receive remote control light
Q1	XDC124EK or DTC124EK	Remote control light sensor	Switches the remote control light sensor
Q2	DTA114EK	Power SW	Power ON/OFF

ELECTRIC UNIT (X25-7232-70)

Ref. No.	Device	Use and Function	Operation and Condition
IC1	M5278D05	5 V AVR	5 V Power supply.
IC2	M5237ML	AVR driver	8 V AVR.
IC3	S-80740AN-D4	Reset IC	
IC4	M38067MCD 155FP	System μ-COM	
IC5	LC3564QM-10	S-RAM	Memory of RDS data such as AF list.
IC6	TC74HC02AF	HC-MOS (NOR)	Control for S-RAM (IC5).
IC7	KK202F	RDS decoder	RDS decoder.
IC8	SAA6579T	RDS demodulator	
IC9	LM7001M	PLL IC	PLL for FM/AM tuner (TU1).
IC10	TC4W66F	C-MOS analog switch	Switches LPF time constant during FM seek.
IC11	NJM4565MD	Noise detect	
IC12	NJM4565MD	RDS circuit	Composite signal buffer
IC14	TEA6320T	Electronic volume	
IC15, 16	AN7190K	Power amplifier	
Q1	DTC124EK or XDC124EK	5 V SW	Turns Q2 ON/OFF
Q2	2SB1277	5 V SW	Interlocked with μ-COM power ON.
Q3	DTC124EK or XDC124EK	14.4 V SW	Turns Q4 ON/OFF
Q4	2SA1428	14.4 V SW	Interlocked with μ-COM power ON.
Q5	2SB1565F (E, F)	AVR	8 V output
Q7	2SD2396F40	Servo +B AVR	Servo power supply, 7.6 V output.
Q8	2SB1565F (E, F)	Illumination AVR	Illumination power supply, 10.5 V output.
Q9	2SC2412K	Illumination AVR	Illumination power supply, 10.5 V output.
Q10	2SB1277	P-CON	P-CON driver
Q11	2SA1037K	P-CON	P-CON protection
Q12	DTA124EK or XDA124EK	P-CON	P-CON protection
Q13	DTC124EK or XDC124EK	P-CON ON/OFF	
Q14	DTC124EK or XDC124EK	BU detector	Collector goes "L" when BU voltage is connected.
Q15	2SC2412K	Acc detector	Collector goes "L" when Acc is ON.

CIRCUIT DESCRIPTION

ELECTRIC UNIT (X25-7232-70)

Ref. No.	Device	Use and Function	Operation and Condition
Q16	DTC144EK or XDC144EK	Reset SW	
Q20	DTC124EK or XDC124EK	Mute drive buffer	Muting driver receiving instructions from system controller.
Q21	2SA1037K	Mute drive buffer	Muting driver receiving instructions from system controller.
Q22	DTA124EK or XDA124EK		
Q23	DTA124EK or XDA124EK	Power amp standby	Turns ON/OFF standby part of power IC. (IC15, 16)
Q24	2SB1326	Illumination SW	Switches between Green/Amber
Q25	DTC124EK or XDC124EK	Illumination SW	Switches between Green/Amber
Q26	2SB1326	Illumination SW	Switches between Green/Amber
Q27	DTC124EK or XDC124EK	Illumination SW	Switches between Green/Amber
Q28	DTA124EK or XDA124EK	Power control buffer	5 V SW and 14.4 V SW (Q1 and Q3 ON/OFF)
Q29	DTC144EK or XDC144EK	DSI driver buffer	DSI control
Q30	DTC124EK or XDC124EK	RDS IC Power control	
Q31	2SA1362 (Y)	RDS IC Power control	
Q32, 33	DTC144EK or XDC144EK	AM AGC	
Q34	2SA1362 (Y)	Panel power SW	
Q35	2SK536	FM LPF	
Q36	DTC144EK or XDC144EK	LPF SW control	
Q37	2SA1037K		
Q38	2SK536	AM LPF	
Q39	DTC144EK or XDC144EK	AM band SW (LW/MW)	
Q40	2SC2412K	Noise detect	
Q41	2SC2412K	FM SD meter buffer	Emitter-follower
Q42	DTC144EK or XDC144EK	FM mono SW	
Q43	2SA1037K	FM SD output buffer	
Q44	DTC114TK	Noise detect	
Q45	DTA124EK or XDA124EK	Noise detect	
Q46	2SB1277	FM+B SW	
Q47	2SB1277	AM+B SW	
Q48	DTC124EK or XDC124EK	FM+B SW	Turns Q46 ON/OFF

CIRCUIT DESCRIPTION

ELECTRIC UNIT (X25-7232-70)

Ref. No.	Device	Use and Function	Operation and Condition
Q49	DTC124EK or XDC124EK	AM+B SW	Turns Q47 ON/OFF
Q50	DTA124EK or XDA124EK	AM AGC/FM AFC SW	
Q51	DTA124EK or XDA124EK	LO/DX SW	
Q54~57	2SD2114K	Muting	Audio muting

CD Player Unit (X32-4010-00)

Device	Components	Purpose, Function	Operation, Condition, Compatibility
IC1	AN8806SB	3-beam head amp IC	Generation of servo error signals (focusing error, tracking error) based on the signals read from the APC circuit and pickup, detection of dropout, antishock, track crossing and off track signals.
IC2	MN662720RB	CD signal processor LSI	Focusing, tracking, sled and spindle servo processing, automatic adjustments (focusing gain, tracking gain, offset, balance). Digital signal processing (DSL, PLL, subcode data processing, CIRC error correction, audio data interpolation).
IC3	SM5873S	D/A converter	8 x oversampling digital filter and analog post LPF are built in.
IC4	NJM4565MD	Active L.P.F.	
IC5	TA78L05F	3-pin regulator	Genetarion of analog 5 V.
IC6	78002BGC603-AB8	Mechanism controller μ-COM	
IC7	BA6795FP	BTL driver	Focusing and tracking coils, sled, spindle and loading motor drive.
IC8	NJM4565MD	TE low-frequency boost	
Q1	2SA1362	APC	LD driver.
Q2	DTC124EK	IC3 reset	
Q3	DTC124EK	X1 oscillation stop	
Q5	2SA1362	5 V SW	
Q6	2SA1037K	Thermal shutdown SW	Transmission to IC6 (Mechanism controller μ-COM) in case high temperature is detected.

CIRCUIT DESCRIPTION

IC4: M38067MCD155FP (X25-7232-70) SYSTEM MICROCOMPUTER

1. Terminal pin layout

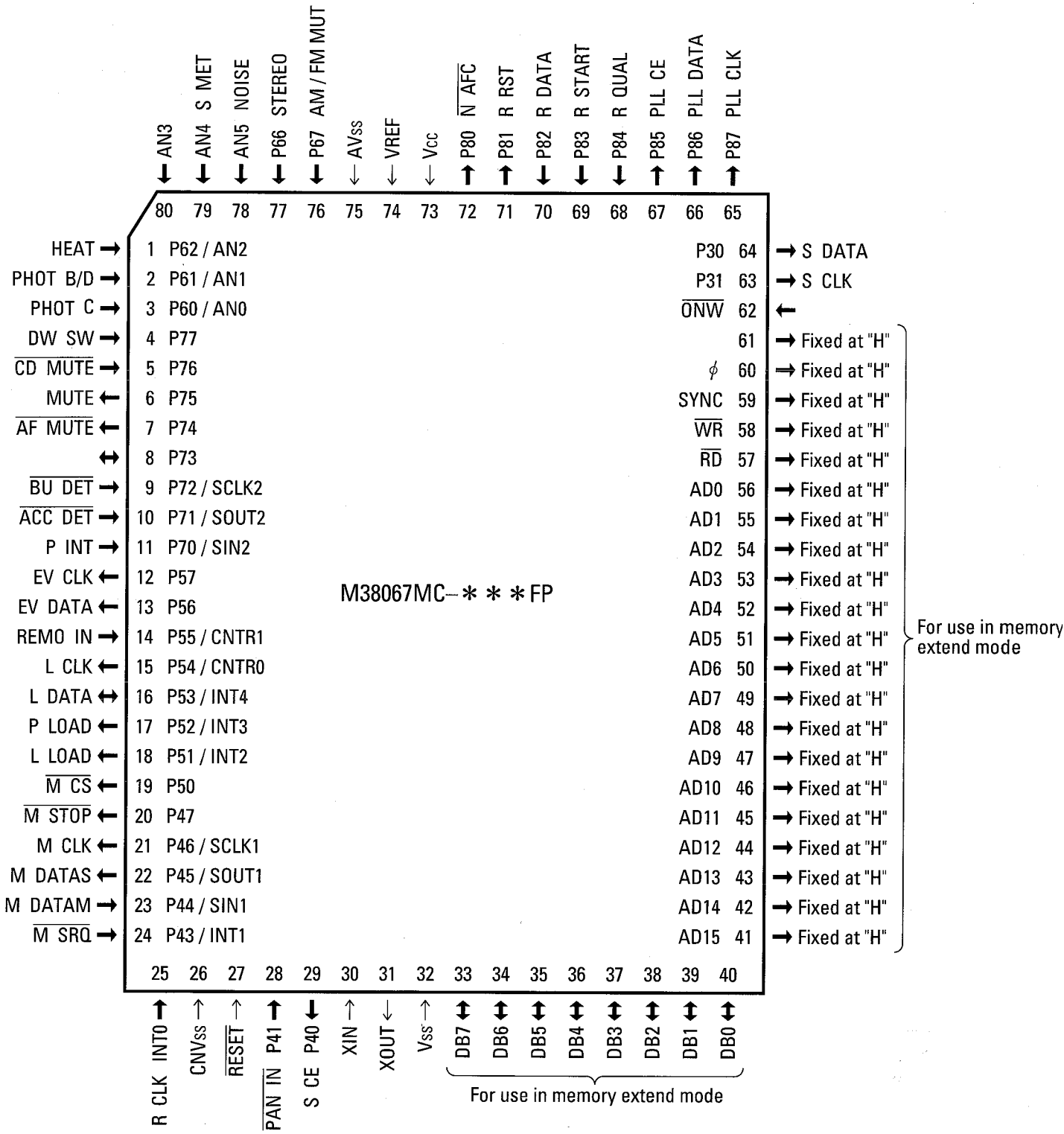

CIRCUIT DESCRIPTION

IC4: M38067MCD155FP (X25-7232-70)

2. Microcomputer terminal description

Pin No.	Pin Name	I/O	Signal Name	Function	Port Active Status	Power OFF
1	AN2	I	HEAT	Temperature rise detection.	HIGH TEMPERATURE	
2	AN1	I	PHOT B/D	Photosensors B/D.		
3	AN0	I	PHOT C	Photosensor C.		
4	P77	I	DW SW	CD mechanism down switch.		
5	P76	I	$\overline{\text{CD MUTE}}$	Muting output request from CD Mechanism μ-COM.		
6	P75	O	MUTE	Muting.		
7	P74	O	$\overline{\text{AF MUTE}}$	Muting (used during AF search).		
8	P73	I				
9	P72	I	$\overline{\text{BU DET}}$	Back-up power.	BACK UP OFF	
10	P71	I	$\overline{\text{ACC DET}}$	Acc power.	ACC OFF	
11	P70	I	P INT	Completion of a key scan cycle of LCD driver (IC1 in X13-).		
12	P57	O	EV CLK	Clock for electronic volume TEA6320T (IC14)		
13	P56	O	EV DATA	Data for electronic volume TEA6320T (IC14)	FM STATION DETECTED	
14	CNTR1	I	REMO IN	Remote control receiving signal.		
15	P54	O	L CLK	LCD DRIVER CLOCK		
16	P53	I/O	L DATA	LCD DRIVER DATA		
17	P52	O	P LOAD	LCD DRIVER (IC1 in X13-) LATCH		
18	P51	O	L LOAD	LCD DRIVER (IC2 in X13-) LATCH		
19	P50	O	$\overline{\text{M CS}}$	Handshake signal from System μ-COM.		
20	P47	O	$\overline{\text{M STOP}}$	Stop request for CD Mechanism μ-COM.		
21	SCLK1	O	$\overline{\text{M CLK}}$	Communications clock for CD Mechanism μ-COM.		
22	TXD	O	M DATA S	Data line from System μ-COM.		
23	RXD	I	M DATA M	Data line from CD Mechanism μ-COM.		
24	INT1	I	$\overline{\text{M SRQ}}$	Handshake signal from CD Mechanism μ-COM.		
25	INT0	I	R CLK	RDS CLOCK		
26	CNVSS	I	CNVSS	μ-COM chip operation mode control switching.	CNVSS=GND	
27	$\overline{\text{RESET}}$	I	$\overline{\text{RESET}}$	Hardware reset.	ACTIVE "L"	
28	P41	I	$\overline{\text{PAN IN}}$	Panel attached/detached signal.	PANEL ATTACHED	
29	P40	O	S CE	G/A CHIP ENABLE		
30	XIN	I	XIN	Clock input.		
31	XOUT	O	XOUT	Clock output.		
32	VSS	I	VSS	Power input.	VSS=GND	
33	P27/DB7	I/O	DB7	S-RAM DATA BUS 7		
34	P26/DB6	I/O	DB6	S-RAM DATA BUS 6		
35	P25/DB5	I/O	DB5	S-RAM DATA BUS 5		
36	P24/DB4	I/O	DB4	S-RAM DATA BUS 4		
37	P23/DB3	I/O	DB3	S-RAM DATA BUS 3		
38	P22/DB2	I/O	DB2	S-RAM DATA BUS 2		
39	P21/DB1	I/O	DB1	S-RAM DATA BUS 1		
40	P20/DB0	I/O	DB0	S-RAM DATA BUS 0		
41	P17/AD15	O	AD15	S-RAM ADDRESS 15		
42	P16/AD14	O	AD14	S-RAM ADDRESS 14		
43	P15/AD13	O	AD13	S-RAM ADDRESS 13		
44	P14/AD12	O	AD12	S-RAM ADDRESS 12		

CIRCUIT DESCRIPTION

IC4: M38067MCD155FP (X25-7232-70)

Pin No.	Pin Name	I/O	Signal Name	Function	Port Active Status	Power OFF
45	P13/AD11	O	AD11	S-RAM ADDRESS 11		
46	P12/AD10	O	AD10	S-RAM ADDRESS 10		
47	P11/AD9	O	AD9	S-RAM ADDRESS 9		
48	P10/AD8	O	AD8	S-RAM ADDRESS 8		
49	P07/AD7	O	AD7	S-RAM ADDRESS 7		
50	P06/AD6	O	AD6	S-RAM ADDRESS 6		
51	P05/AD5	O	AD5	S-RAM ADDRESS 5		
52	P04/AD4	O	AD4	S-RAM ADDRESS 4		
53	P03/AD3	O	AD3	S-RAM ADDRESS 3		
54	P02/AD2	O	AD2	S-RAM ADDRESS 2		
55	P01/AD1	O	AD1	S-RAM ADDRESS 1		
56	P00/AD0	O	AD0	S-RAM ADDRESS 0		
57	P37/$\overline{RD}$	O	$\overline{RD}$	S-RAM READ CONTROL		
58	P36/$\overline{WR}$	O	$\overline{WR}$	S-RAM WRITE CONTROL		
59	P35/SYNC	O	SYNC	"H" output for a ø period when opcode is fetched. (Not used)		
60	P34/ø	O	ø	Internal system clock ø output. (Not used)		
61	P33/$\overline{RESETOUT}$	O	"H"	"H" output permanently. (Not used)		
62	P32/$\overline{ONW}$	I	$\overline{ONW}$	Delay of internal system clock ø by half period. (Not used)		
63	P31	O	S CLK	G/A IC CLOCK		
64	P30	O	S DATA	G/A IC DATA		
65	P87	O	PLL CLK	PLL LM7001M (IC9) CLOCK		
66	P86	O	PLL DATA	PLL LM7001M (IC9) DATA		
67	P85	O	PLL CE	PLL LM7001M (IC9) CHIP ENABLE		
68	P84	I	R-QUAL	RDS QUALITY		
69	P83	I	R START	RDS DATA START BIT		
70	P82	I	R DATA	RDS DATA		
71	P81	O	R RST	Sync µ-COM reset signal.		
72	P80	O	$\overline{N\ AFC}$	RDS NOISE AFC		
73	VCC	I	VCC	Power input.	VCC=+5 V	
74	VREF	I	VREF	A-D converter reference voltage. Analog maximum voltage.	VREF=+5 V	
75	AVSS	I	AVSS	A-D converter analog power input. Analog minimum voltage.	AVSS=GND	
76	P67	I	AM/FM MUT	AM SD/FM band muting.	STATION DETECTED	
77	P66	I	STEREO	FM STEREO	STEREO	
78	AN5	I	NOISE	FM noise		
79	AN4	I	S MET	FM S-METER		
80	AN3	I	PHOT A	Photosensor A		

CIRCUIT DESCRIPTION

IC1: AN8806SB (X32-4010-00) 3-BEAM HEAD AMPLIFIER IC

Block diagram

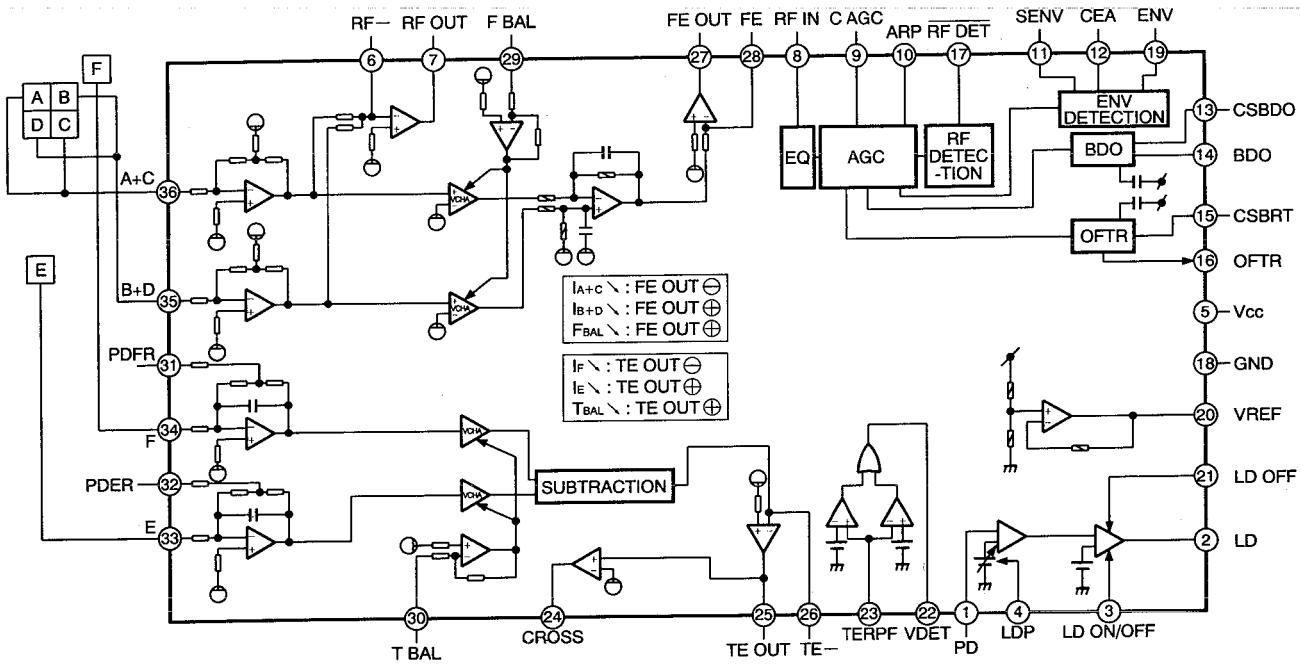

Terminal description

Pin No.	Symbol	I/O	Function
1	PD	I	APC Amp. input pin
2	LD	O	APC Amp. output pin
3	LD ON/OFF	I	APC ON/OFF control pin
4	LDP	I	APC reference voltage pin
5	Vcc	–	Power supply pin
6	RF–	I	RF Amp inverted input pin
7	RF OUT	O	RF Amp output pin
8	RF IN	I	AGC input pin
9	C AGC		AGC loop filter connection pin
10	ARP	O	AGC output pin
11	SENV		RF detection capacitor connection pin
12	CEA		HPF-Amp capacitor connection pin
13	CSBDO		RF darker side envelope detection capacitor connection pin
14	BDO	O	BDO output pin
15	OSBRT		RF lighter side envelope detection capacitor connection pin
16	OFTR	O	OFTR output pin
17	$\overline{\text{RF DET}}$	O	RFDET output pin
18	GND	–	Ground pin
19	ENV	O	3TENV output pin
20	VREF	O	VREF output pin
21	LD OFF	I	APC OFF control pin

IC1: AN8806SB (X32-4010-00)

Pin No.	Symbol	I/O	Function
22	VDET	O	VDET output pin
23	TERPF	I	VDET input pin
24	CROSS	O	CROSS output pin
25	TE OUT	O	TE.Amp output pin
26	TE–	O	TE.Amp inverted input pin
27	FE OUT	O	FE.Amp output pin
28	FE	I	FE.Amp inverted input pin
29	F BAL	I	F.BAL control pin
30	T BAL	I	T.BAL control pin
31	PDFR		I-V Amp converting resistance alignment pin
32	PDER		I-V Amp converting resistance alignment pin
33	E	I	I-V Amp input pin
34	F	I	I-V Amp input pin
35	B+D	I	I-V Amp input pin
36	A+C	I	I-V Amp input pin

CIRCUIT DESCRIPTION

IC1: AN8806SB (X32-4010-00)
3-BEAM HEAD AMPLIFIER IC

(Note: The values mentioned below are the design values when supply voltage Vcc = 5 V.)

1. Tracking circuitry

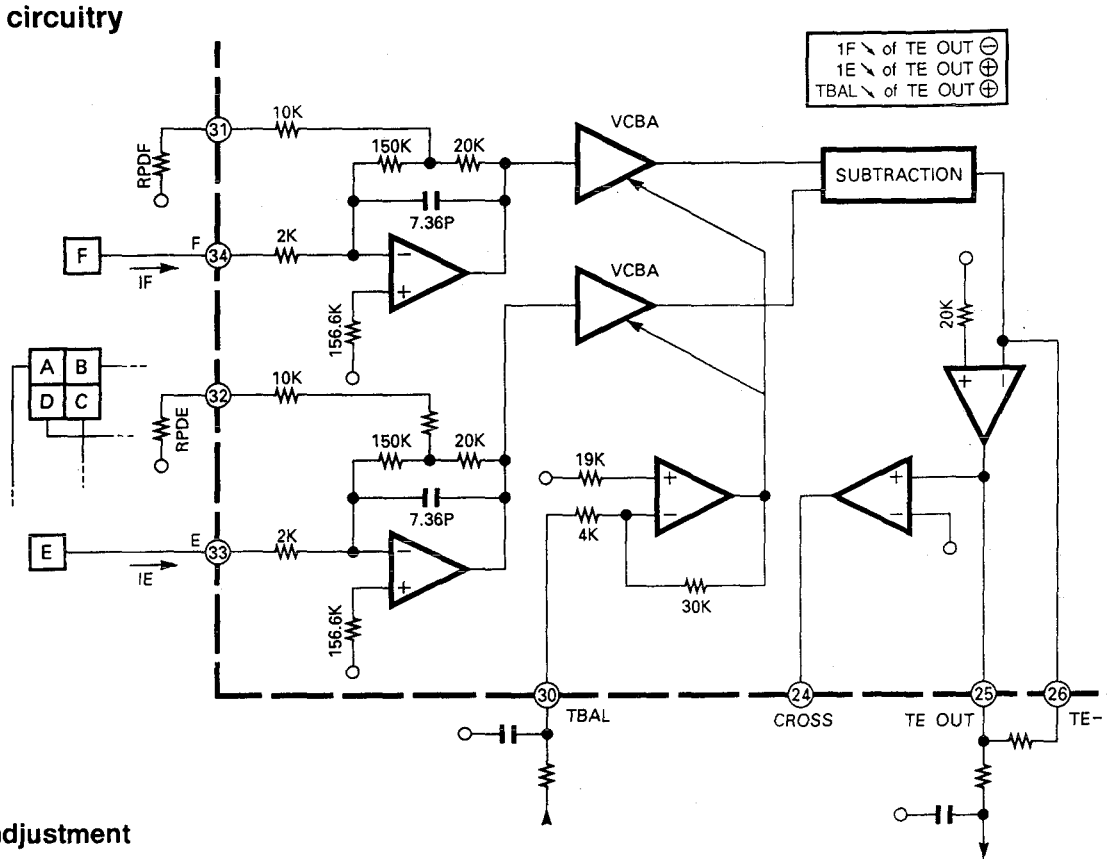

(1) IV amp adjustment

The conversion resistance value of the IV amps can be obtained with the following calculation.

$$Z_{IV} = 150K + 20K + \frac{150K \times 20K}{10K + R_{PDF(E)}} \quad \cdots\cdots\cdots\cdots \textcircled{1}$$

When $R_{PDF(E)}$ = 0, that is, when pins ㉛ and ㉜ are equal to V_{REF}, the maximum value of Z_{IV} will be as follows:

$$Z_{IV} = 150K + 20K + \frac{150K \times 20K}{10K} = 470K \text{ ohms}$$

Assuming that tracking PD elements F and E output I_F and I_E respectively, these currents have the patterns as sown in the left and their maximum input values are approx. 2.2 μA. If the maximum input current exceeds this value, resistances should be attached to pins ㉛ and ㉜. The value of these resistances can be obtained as follows:

$$R_{PDE} = \frac{150K \times 20K}{\frac{1.0}{I_{MAX}} - (150K + 20K)} - 10K\Omega$$

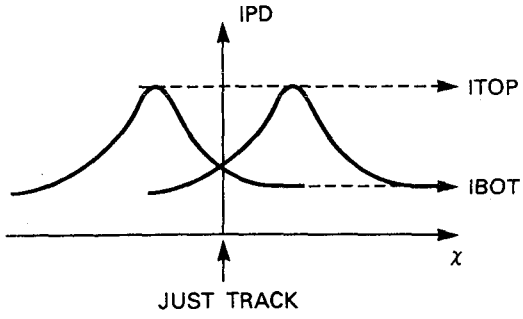

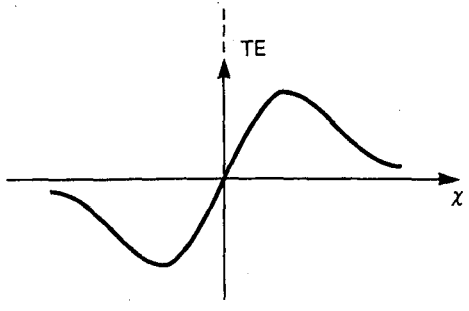

CIRCUIT DESCRIPTION

IC1: AN8806SB (X32-4010-00)

Each IV converter amp incorporates a filter. When pins ㉛ and ㉜ are connected directly to V_{REF}, the cut-off frequency fc of the filter will be as follows:

$$fc = \frac{1}{2\pi \cdot 470K \cdot 7.36pF} \fallingdotseq \text{approx. } 46 \text{ kHz}$$

(2) Tracking balance

As shown in the block diagram on the previous page (tracking circuitry), a resistor and capacitor are connected to pin ㉚ and the balance is adjusted from the resistor. The signal ratio of VCBA can be varied from approx. 0.14 up to 7 with a variable input of ±1 [V] with respect to the reference voltage V_{REF}. The polarity is set so that TEOUT rises when the variable input changes from +1 [V] to -1 [V]. When the variable input is equal to V_{REF}, the VCBA signal ratio is equal to 1.

(3) Tracking error amp

The tracking error outputs F and E are output at pin ㉕. (To set the amplitude, connect a resistor across pins ㉕ and ㉕ so that TEOUT from pin ㉕ is 1.67 Vp-p.)

This output has an absorption current of approx. 300 µA, so care is required at the time of external connection.

(4) Cross-comparator

Based on the TEOUT signal at pin ㉕, the cross-comparator output signal is output at pin ㉔.

(Note) This comparator does not include hysteresis.

2. Vibration detector

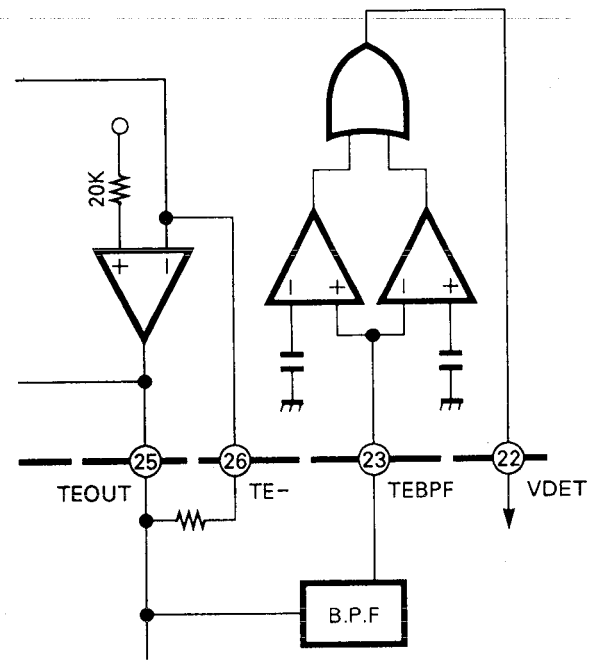

This circuit is composed of a wind comparator of approx. ±75 mV. It detects abnormal vibration component of tracking error and outputs "High" at VDET of pin ㉒.

The input signal is obtained from TEOUT at pin ㉕ which passes through the band-pass filter (B.P.F.) and input to pin ㉓.

3. Focusing circuitry

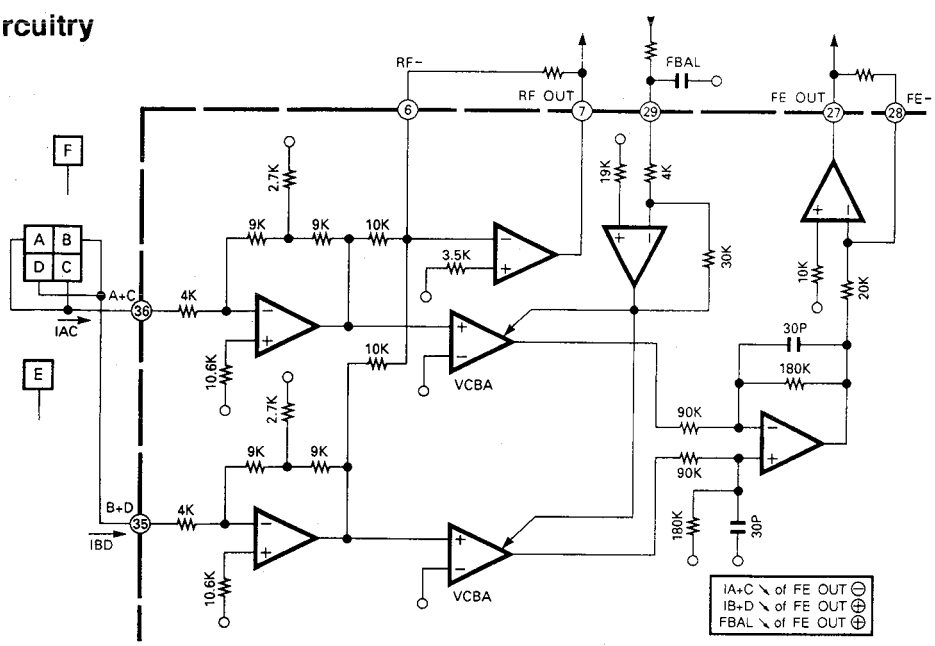

CIRCUIT DESCRIPTION

IC1: AN8806SB (X32-4010-00)

(1) Focusing error

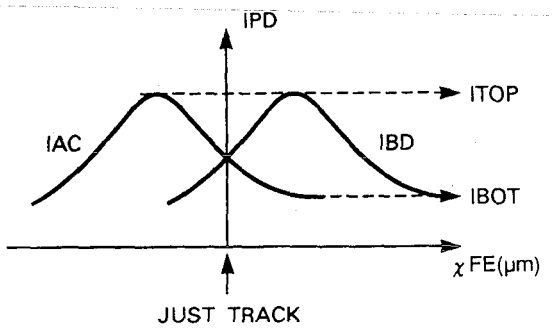

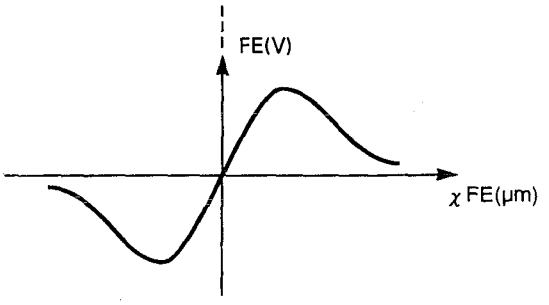

The PD output currents have the patterns as shown on the above. Similarly to the case of tracking error, the knowledge on their maximum values including the output current dispersion is required.

After passing through the balance amp (VCBA), the signals are input to the differential amp with a cutoff frequency of 30 kHz, sent through the gain setting amp and output at FEOUT of pin ㉗. To set the amplitude, connect a resistor across pins ㉘ and ㉗ so that FEOUT from pin ㉗ is 1.67 Vp-p.

(2) Focusing balance

As shown in the block diagram on the previous page (focusing circuitry), a resistor and capacitor are connected to pin ㉙ and the balance is adjusted from the resistor. The signal ratio of VCBA can be varied from approx. 0.14 up to 7 with a variable input of ±1 [V] with respect to the reference voltage V_{REF}. The polarity is set so that FEOUT rises when the variable input changes from +1 [V] to -1 [V]. When the variable input is equal to V_{REF}, the VCBA signal ratio is equal to 1.

(3) RF amp

The signals input from the PD elements passes through the IV converter amps, composed into an RF signal by the RF amp and output at RFOUT of pin⑦. (To set the gain of this amp, connect a resistor across pins ⑥ and ⑦ so that RFOUT from pin⑦is approx. 0.5 Vp-p.)

4. RF AGC - detector circuitry

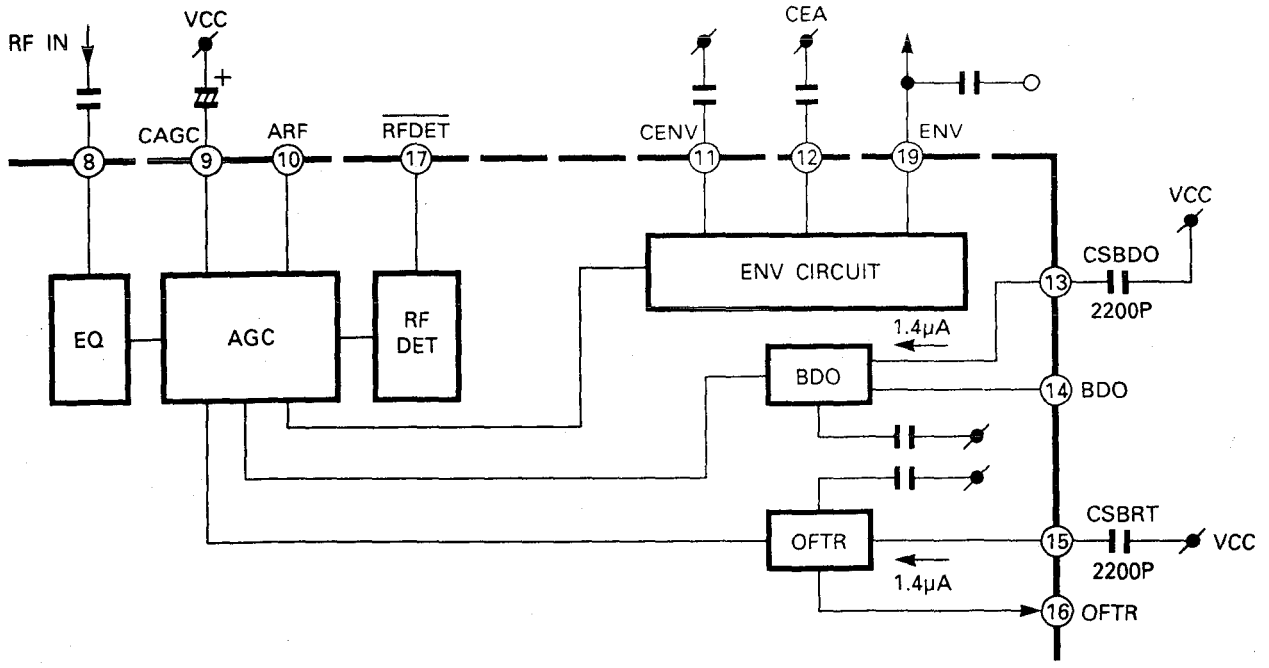

CIRCUIT DESCRIPTION

IC1: AN8806SB (X32-4010-00)

(1) RF AGC

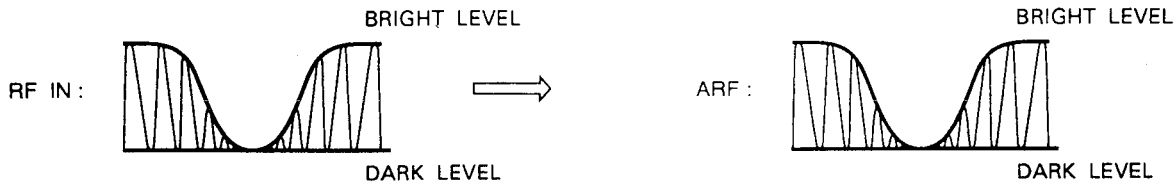

The RF signal from pin ⑦ is input to pin ⑧ via a capacitor. After the gain has been controlled, it is output at pin 10. The input signal level is from approx. 250 mVp-p or 500 mVp-p (TYP.) to 1.0 Vp-p, and the output level is approx. 1.0 Vp-p (when input signal f = 500 kHz). Pin ⑨ is designed to connect the capacitor for the AGC loop filter,a nd it is recommended to connect a capacitor of around 1 µF between the pin and Vcc. The internal impedance of this terminal is approx. 100 kΩ. The input impedance of the EQ connected to pin ⑧ is approx. 27.9 kΩ and the EQ characteristic is as shown in the next figure (which shows an approximate characteristic based on calculations).

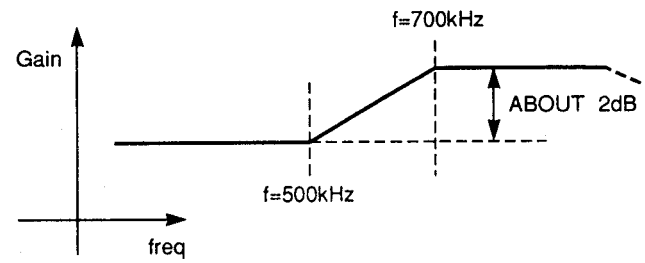

The EQ characteristic shown is the characteristic when the gain is almost maximum.

(2) RF detection (NRFDET)

This circuit detects the amplitude of the RF signal input through pin⑧. The input RF signal passes through the high-pass filter with an fc = 50 kHz before being detected. The detection level is approx. 100 mV when the input frequency is 500 kHz, and there is a hysteresis of approx. 50 mV.

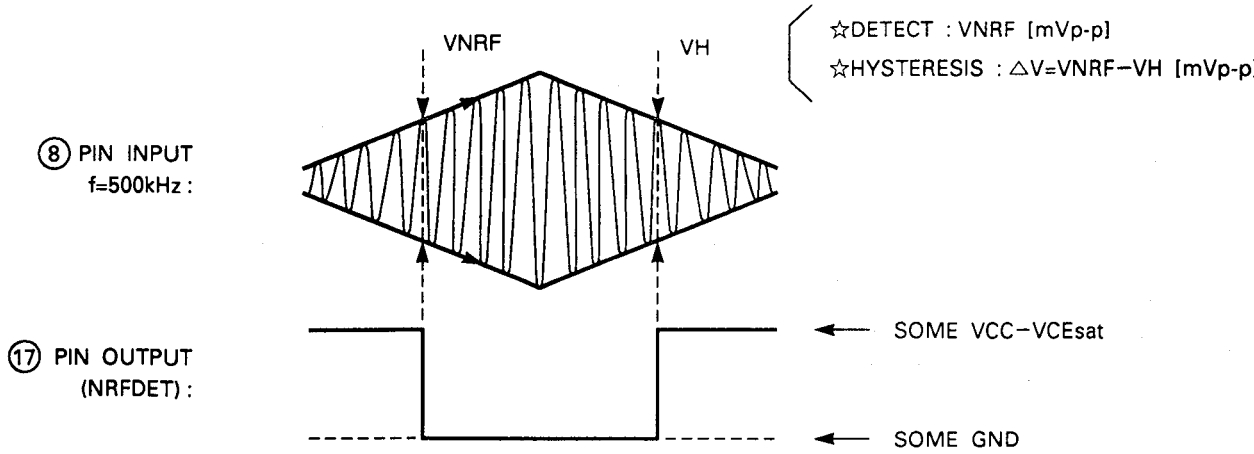

CIRCUIT DESCRIPTION

IC1: AN8806SB (X32-4010-00)

(3) BDO detection

The BDO is detected by means of high-speed detection (built in) and low-speed detection of the RF signal during BDO. The low-speed detection requires a capacitor between pin ⑬ and Vcc. The use of a larger-capacity capacitor detects large RF dropout and the use of a shorter-capacity capacitor detects small RF dropouts. The detection current is approx. 1.4 µA (TYP.), and the recommended capacity is 2200 pF. With this condition, the BDO is detected when the RF amplitude drops by approx. 25%.

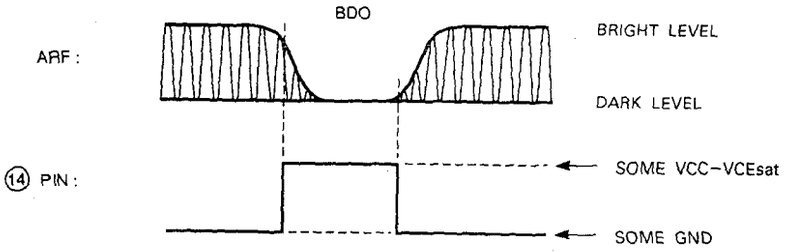

(4) OFTR detection

Similarly to BDO detection, The OFTR is also detected with high-speed detection (built in) and low-speed detection. The low-speed detection requires a capacitor between pin ⑮ and Vcc. The detection current is approx. 1.4 µA (TYP.). The relationship with the capacity is similar to the VDO detection. The recommended capacity is also 2200 pF. With this condition, the OFTR is detected when the RF amplitude drops by approx. 65%.

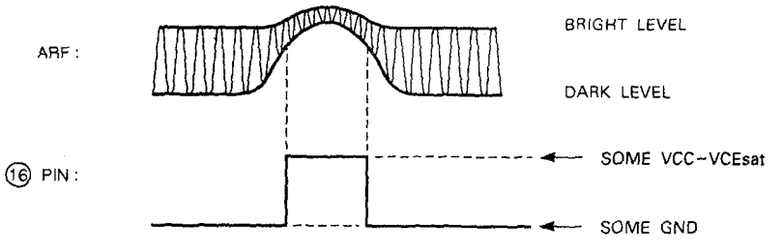

5. APC

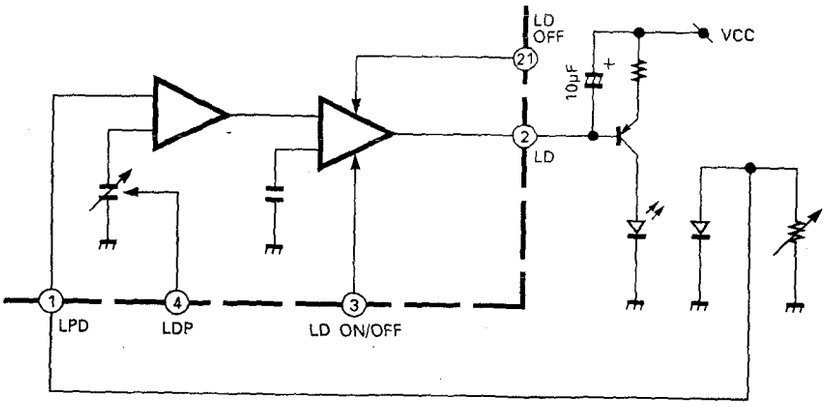

The LD reference voltage can be switched by setting pin ④ open or connecting it to GND. The reference voltage is approx. 170 mV when pin ④ is open, and approx. 140 mV when pin ④ is connected to GND.

Pins ③ and ㉑ are control terminals for turning the LD on and off. The LED goes on when "High" is input to pin ③ and goes off when "High" is input to pin ㉑.

CIRCUIT DESCRIPTION

IC1: AN8806SB (X32-4010-00)

6. Reference power

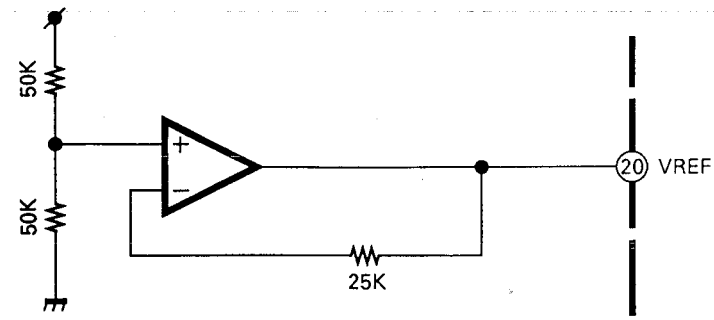

The reference power supply for servo operations is built in.

(Pin ⑳ Vcc × (1/2) [V] Current capacity
Sink & source approx. 3 mA)

This power supply requires a capacitor for prevention of oscillation. To pin ⑳, it is recommended to connect a capacitor of 1 to 10 µF.

7. Envelope detector

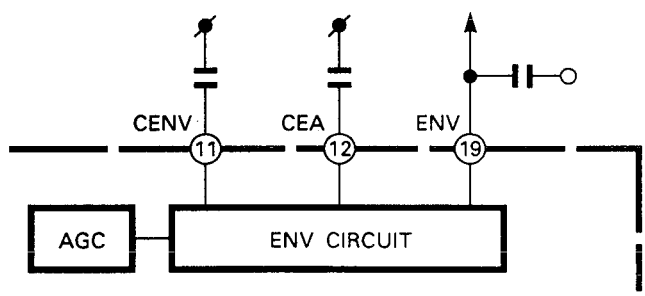

This block extracts the fluctuation of the 3T component of RF signal that is required for focusing balance adjustment.

Pins ⑪ and ⑫ are used to connect capacitors which form a part of the filter for extracting the signal fluctuation. It is recommended co connector a capacitor of approx. 100 pF to pin ⑪ and a capacitor of approx. 0.027 µF to pin ⑫. The input impedance of pin ⑫ is approx. 8.5 kΩ.

Pin ⑲ is the envelope output terminal. This terminal requires external connection of a capacitor which forms the part of the filter, and it is recommended to connect a capacitor of approx. 0.027 µF between V_{REF}. The output impedance of pin ⑲ is approx. 8.5 kΩ.

CIRCUIT DESCRIPTION

IC2: MN662720RB (X32-4010-00)
CD SIGNAL PROCESSOR LSI

1.Type
CD (Compact Disc) signal processor LSI.

2.Summary
The MN662720RB is a CD signal processor LSI incorporating the optical servo (focusing, tracking and traverse servo) processing functions, digital signal processing functions (EFM demodulation, error correction) and spindle motor digital servo processing function for a CD player in a single chip.

3. Features and functions
(Optical servoes)
- Focusing, tracking and traverse servo.
- Automatic adjustment functions (FO/TR gain, FO/TR offset, FO/TR balance)
- Built-in DC converter for drive voltage output.
- Built-in drop-out countermeasure.
- Anti-shock function compatibility.
- Built-in track cross counter.
- Linear motor and screw-feed traverse compatibility.
- 3-beam and 1-beam compatibility.

(Digital signal processing)
- Built-in DSL and PLL.
- Frame sync detection/protection/interpolation.
- Subcode data processing
  Q data CRC check,
  Q data register built in.
- CIRC error correction
  C1 decoder: Double error correction
  C2 decoder: Triple error correction
  Built-in deinterleaving 16K RAM
- Audio data interpolation
  Average interpolation, previous value hold,
  soft muting,
  digital attenuation (256 levels).
- Soft attenuation (256 levels).
- Audio data peak level detection function.
- Auto cue detection.
- Digital audio interface (EIAJ format).
- Audio data serial interface.

(Spindle motor servo)
- CLV digital servo.

(Other)
- Built-in playback pitch control function (±13%)
- Double-speed playback.

4. Appearance
80-pin, flat package (QFS080-P-1414).

CIRCUIT DESCRIPTION

IC2: MN662720RB (X32-4010-00)

5. Pin layout

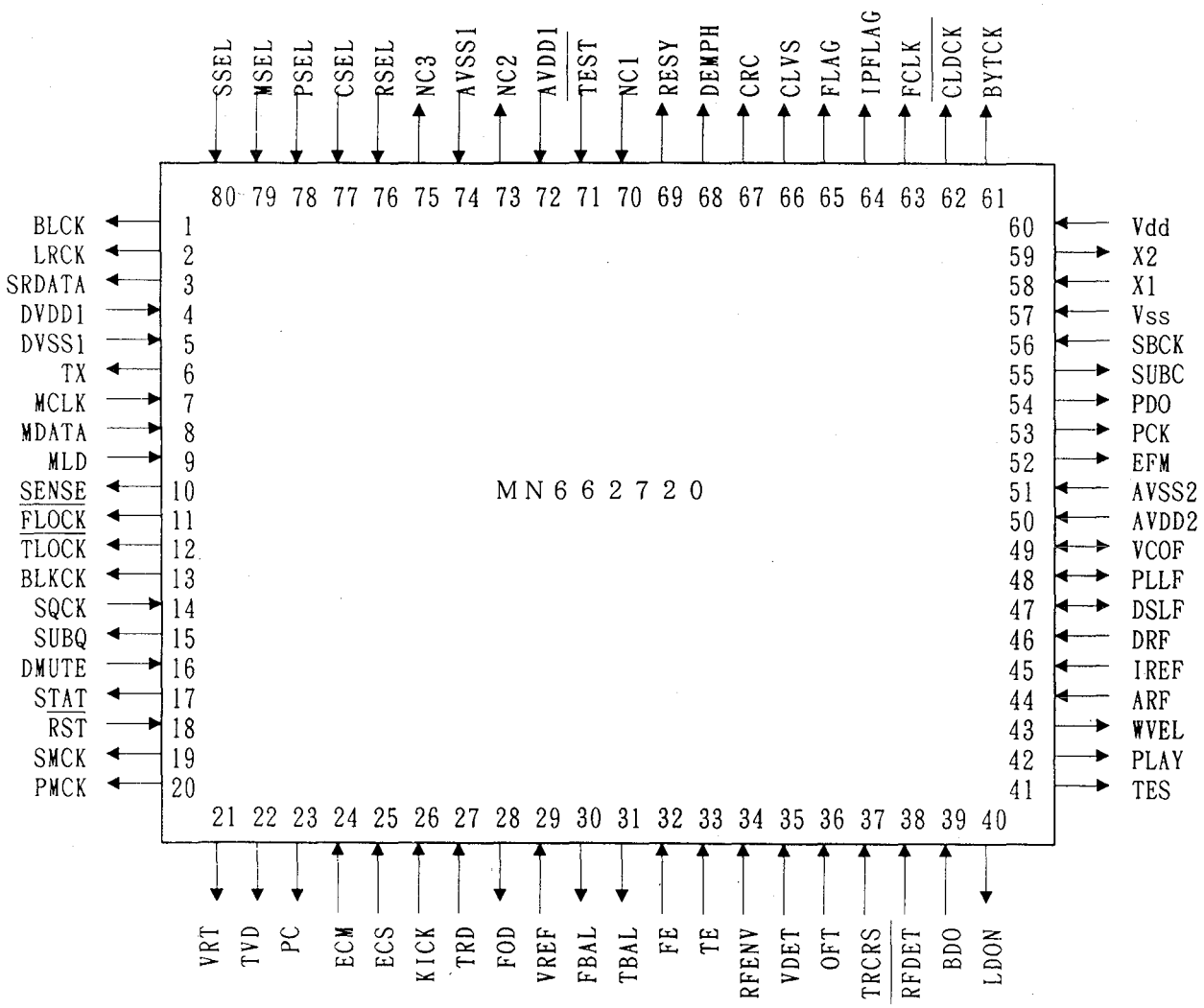

CIRCUIT DESCRIPTION

IC2: MN662720RB (X32-4010-00)

6. Block diagram

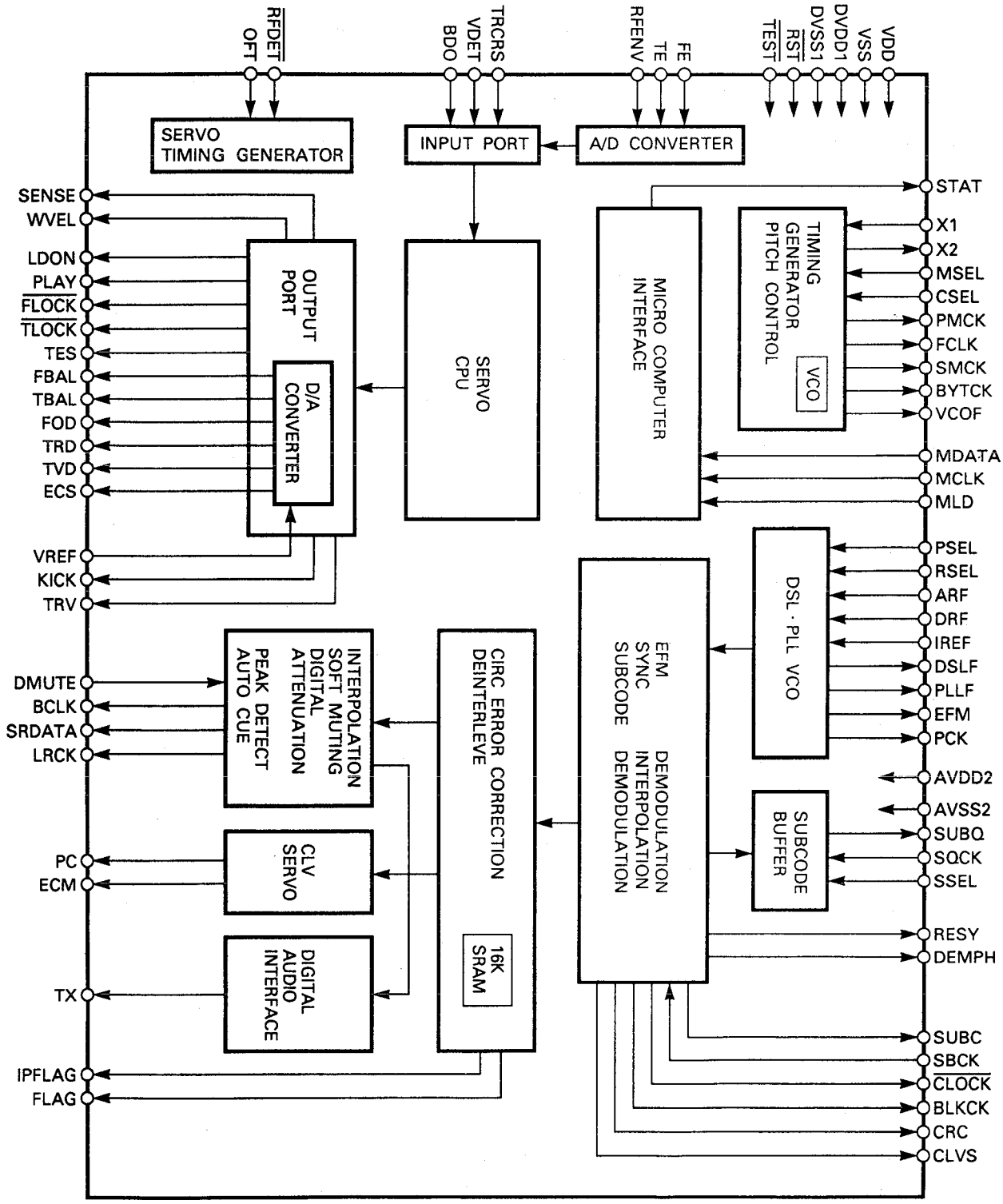

CIRCUIT DESCRIPTION

IC2: MN662720RB (X32-4010-00)

7. Terminal description

Pin No.	Symbol	I/O	Function
1	BCLK	O	Bit clock output for SR data.
2	LRCK	O	L/R identification signal output.
3	SRDATA	O	Serial data output.
4	DVDD1	I	Digital circuit power supply.
5	DVSS1	I	Digital circuit GND.
6	TX	O	DIgital audio interface output signal.
7	MCLK	I	Microcomputer command clock signal input. (Data is latched at the positive-going edges.)
8	MDATA	I	Microcomputer command data input.
9	MLD	I	Microcomputer command load signal input. (L: Load)
10	SENSE	O	Sense signal output (OFT, FESL, NACEND, NAJEND, POSAD, SFG).
11	/FLOCK	O	Focusing servo lock signal. (L: Locked)
12	/TLOCK	O	Tracking servo lock signal. (L: Locked)
13	BLKCK	O	Subcode block clock signal. (fBLKCK=75Hz)
14	SQCK	I	External clock input for subcode Q register.
15	SUBQ	O	Subcode Q code output.
16	DMUTE	I	Muting input. (H: Muting)
17	STAT	O	Status signal output (CRC, CUE, CLVS, TTSTOP, FCLV, SQOK).
18	/RST	I	Reset input. (L: Reset)
19	SMCK	O	When MSEL=H, 8.4672 MHz clock signal output. When MSEL=L, 4.2336 MHz clock signal output.
20	PMCK	O	88.2 kHz clock signal output.
21	TRV	O	Traverse forced feed output.
22	TVD	O	Traverse drive output.
23	PC	O	Spindle motor ON signal. (L:ON)
24	ECM	O	Spindle motor drive signal (forced mode output), 3-state.
25	ECS	O	Spindle motor drive signal (servo error signal output).
26	KICK	O	Kick pulse output.
27	TRD	O	Tracking drive output.
28	FOD	O	Focusing drive output.
29	VREF	I	Reference voltage for DA output block (TVD, ECS, TRD, FOD, FBAL, TBAL).
30	FBAL	O	Focusing balance adjustment output.
31	TBAL	O	Tracking balance adjustment output.
32	FE	I	Focusing error signal input (analog input).
33	TE	I	Tracking error signal input (analog input).
34	RFENV	I	RF envelope signal input (analog input).
35	VDET	I	Vibration detection signal input. (H: Detected)
36	OFT	I	Off-track signal input. (H: Off-track)
37	TRCRS	I	Track crossing signal input.
38	/RFDET	I	RF detection signal input. (L: Detected)
39	BDO	I	Drop-out signal input. (H: Drop-out)
40	LDON	O	Laser ON signal output. (H: ON)

CIRCUIT DESCRIPTION

IC2: MN662720RB (X32-4010-00)

Pin No.	Symbol	I/O	Function
41	TES	O	Tracking error shunt signal output. (H:Shunt)
42	PLAY	O	Play signal output. (H: Play)
43	WVEL	O	Double-speed status signal output.
44	ARF	I	RF signal input.
45	IREF	I	Reference current input terminal.
46	DRF	I	DSL bias terminal.
47	DSLF	I/O	DSL loop filter terminal.
48	PLLF	I/O	PLL loop filter terminal.
49	VCOF	I/O	VCO loop filter terminal.
50	AVDD2	I	Analog circuit power supply (for DSL, PLL and DA output blocks).
51	AVSS2	I	Analog circuit GND (for DSL, PLL and DA output blocks).
52	EFM	O	EFM signal output.
53	PCK	O	PLL extraction clock output. (fPCK=4.321MHz)
54	PDO	O	Output terminal of phase comparison signal between EFM signal and PCK signal.
55	SUBC	O	Subcode serial output data output.
56	SBCK	I	Subcode serial output clock input.
57	VSS	I	Oscillator circuit GND.
58	X1	I	X'tal oscillator input terminal. f = 16.9344 MHz or 33.8688 MHz.
59	X2	O	X'tal oscillator output terminal. (33.8688 MHz is used for double-speed playback.)
60	VDD	I	Oscillator circuit power supply.
61	BYTCK	O	Byte clock output.
62	/CLDCK	O	Subcode frame clock signal output. (fCLOCK=7.35kHz)
63	FCLK	O	X'tal frame clock output. (fFCLK=7.35kHz)
64	IPFLAG	O	Interpolation flag output. (H: Interpolation)
65	FLAG	O	Flag output.
66	CLVS	O	Spindle servo phase sync status signal output. (H: CLV, L: Coarse servo)
67	CRC	O	Subcode CRC check result output. (H: OK, L: NG)
68	DEMPH	O	De-emphasis detection signal output. (H:ON)
69	RESY	O	When SSEL=H; FLAG6 output (RAM address reset generation signal in case the jitter margin of CLV servo is exceeded. L: Address reset generation.) When SSEL=L; RESY output (frame sync re-sync signal output. H: Sync, L: Out of sync.)
70	NC1	NC	No connection (without internal connection).
71	/TEST	I	Test terminal. (Normally H)
72	AVDD1	I	Digital circuit power supply.
73	NC2	NC	No connection (without internal connection).
74	AVSS1	I	Digital circuit GND.
75	NC3	NC	No connection (without internal connection).
76	RSEL	I	RF signal polarity select terminal. When bright level is "H": RSEL=H. When bright level is "L": RSEL=L.
77	CSEL	I	X'tal oscillation frequency select terminal. X'tal oscillator frequency 33.8688 MHz: CSEL=H. 16.9344 MHz: CSEL=L.
78	PSEL	I	Test terminal. (Normally L)
79	MSEL	I	SMCK terminal output frequency select terminal.(H: SMCK = 8.4672 MHz, L: SMCK = 4.2336 MHz)
80	SSEL	I	SUBQ terminal output mode select terminal. (H: Q code buffer use mode)

CIRCUIT DESCRIPTION

IC2: MN662720RB (X32-4010-00)

8. Automatic adjustment

	Command								Operation Summary	Required Time	Traverse Operation
	B7	B6	B5	B4	B3	B2	B1	B0			
FO offset AOC1	1	1	1	1	1	0	0	1	Moves the focusing lens to the lowest point and obtained the value of focusing error in this condition for using it as the offset value in compensation.	140ms	FWD/ REV possible.
TR offset AOC2	1	1	1	1	1	0	1	0	Offset adjustment by turning LDON terminal "L" (laser OFF). Usable by fixing the TES terminal on the side of the externally-connected head amp to "L".	50ms	FWD/ REV possible.
FO balance ABC1	1	1	1	1	0	1	1	1	Compensation by injecting external disturbance into the focusing servo loop and balancing the ripples of the 3T component envelope of RF signal in the positive and negative sections of FE signal. The compensation output terminal is FBAL.	Below 0.5S	STOP
TR balance ABC2	1	1	1	1	1	0	1	1	Compensation by using the average tracking error value during rotation of spindle in 6T mode as the balance value. The compensation output terminal is TBAL.	Below 1S	STOP
FO coarse gain AGC1	1	1	1	1	1	1	0	0	Performs focusing search at approx. 5.4 Hz and determines the amount of external disturbance injection for fine AGC based on the focusing error S p-p value. The gain itself is not changed.	190ms	FWD/ REV possible.
TR coarse gain AGC2	1	1	1	1	1	1	0	1	Determines the amount of external disturbance injection for the fine AGC based on the tracking error p-p value during rotation of spindle in 6T mode. The gain itself is not changed.	100ms	STOP
FO fine gain FAGC	1	1	1	1	1	1	1	0	By injecting external disturbance in the focusing servo loop, adjusts the gain cross-point to the frequency set in the RAM with a label name of GSET.	Below 0.5S	STOP
TR fine gain TAGC	1	1	1	1	1	1	1	1	By injecting external disturbance in the tracking servo loop, adjusts the gain cross-point to the frequency set in the RAM with a label name of GSET.	Below 0.5S	STOP

CIRCUIT DESCRIPTION

IC2: MN662720RB (X32-4010-00)

Auto focusing search

When the Focusing ON command (TOF or PLY) is input through the μ-com interface, the FOD terminal generates a triangular wave of approx. 1.3Hz, which drives the focusing coil so the focusing servo is locked automatically when the S-shaped waveform of focusing error signal is detected. /FLOCK goes "L" when the focusing servo is locked successfully.

The just-in-focus point of focusing servo is detected based on the error signal input from the FE terminal. Namely, at the moment a value lower by 30LSB from the peak value of the S-shaped signal at the FE terminal is detected, the lens is stopped by fully driving the servo output to the opposite drive direction.
When the inclination of the error signal from the FE signal is inverted from the previous direction, the stoppage of lens drive is identified and the servo loop is turned ON.

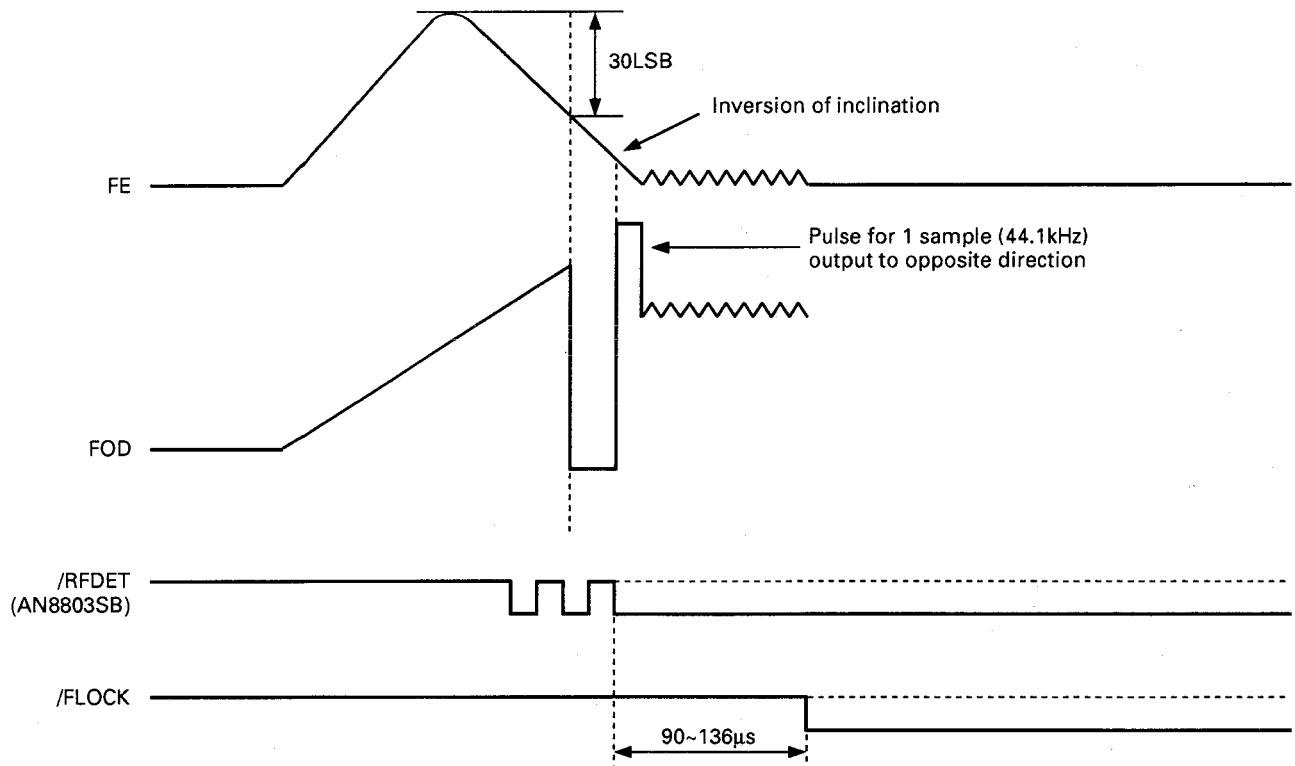

Example of focusing search operation

In case focusing servo locking fails due to a certain reason, the locking operation is re-tried automatically. Also, the locking operation is activated automatically in case the /FLOCK terminal goes "H" during playback (with focusing servo ON, tracking servo ON).

CIRCUIT DESCRIPTION

IC2: MN662720RB (X32-4010-00)

/FLOCK

The focusing servo lock signal /FLOCK is generated from the RF detection signal input ("L" : Detected) from /RFDET. /FLOCK is "H" when focusing is unlocked and "L" when it is locked.

① .....When /RFDET has been "L" for more than 90 to 136µs, /FLOCK goes "L".

② .....When /RFDET has been "H" for more than 8.7 to 11.6ms, /FLOCK goes "H".

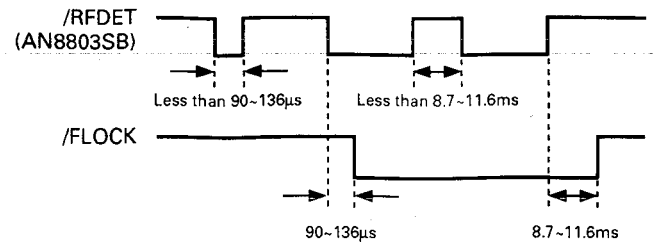

Focusing servo locking timing

Disc detection (DDT)

The FOD terminal generates a triangular wave of approx. 5.4Hz and disc detection signal FESL is output at SENSE. SENSE (FESL) is turned "H" when the disc is detected.

- The focusing servo is not locked in this operation.
- The amplitude of the triangular wave is equal to the signal for use in focusing search.
- The disc detection operation is continued until another command is input.

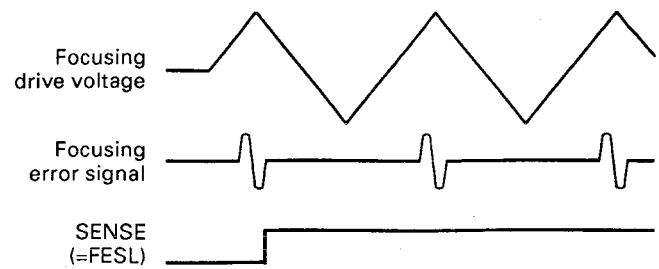

Example of disc detection operation

Auto tracking servo lock

When the tracking ON command (PLY) is input through the µ-com interface, the tracking servo is locked to the nearest track while monitoring tracking error signal TE and off-track signal OFT ("H" : Off the track). In this operation, the loop filter output is basically held and the tracking coil is driven by the kick pulse output from the KICK terminal.

When off-track signal OFT has been "L" continuously for approx. 5.8ms, the kick pulse generation is stopped and the circuitry enters the ordinary servo status.

The /TLOCK terminals goes "L" when the tracking servo is locked.

Tracking servo lock control

- ①, ③ ... Pulse drive in the direction of the target track
- ②, ④ ... Pulse dive in the opposite direction to the target track
- Servo is turned ON when the inclination of TE changes while TP (Track Position)=0 (OFT= "L") (minimum relative velocity).
- For the tracking servo, the P.U. is forced by the pulse drive to move until the on-track position (OFT= "L") of the target track and servo is locked when the relative velocity becomes slow enough.

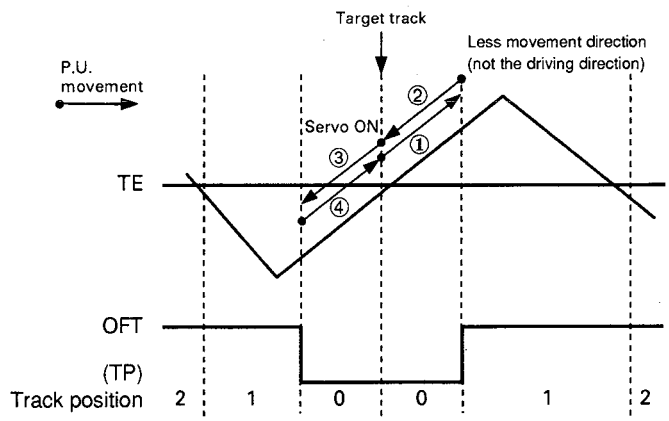

CIRCUIT DESCRIPTION

IC2: MN662720RB (X32-4010-00)

/TLOCK

Tracking lock signal TLOCK is generated from the off-track signal input from OFT. /TLOCK is "H" when tracking is unlocked and "L" when it is locked.

① .....When /OFT has been "L" for more than 2.9ms, /TLOCK goes "L".
②" .....When /OFT has been "H" for more than 11.3 to 17.0 µs, /TLOCK goes "H".

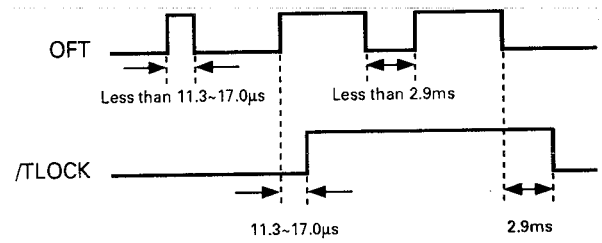

Tracking servo locking timing

Anti-shock processing

The forced braking is applied for the specified period of time after vibration detection signal VDET ("H" : Detected) has returned from "H" to "L". If off-track signal OFT goes "H" in this period, a kick pulse is generated to turn OFT "L" and improve the resistance against shock. If OFT goes "H" again during the forced braking, the forced braking is extended for the specified period from that moment.

- As the traverse is in the STOP status during the forced braking, do not keep the VDET terminal "H". The forced braking period can be set with data setting SET0.
- It is possible to increase the gain for a certain period when vibration detection signal VDET has gone "H". The amount and period of the gain increase can be set with data setting VSET.

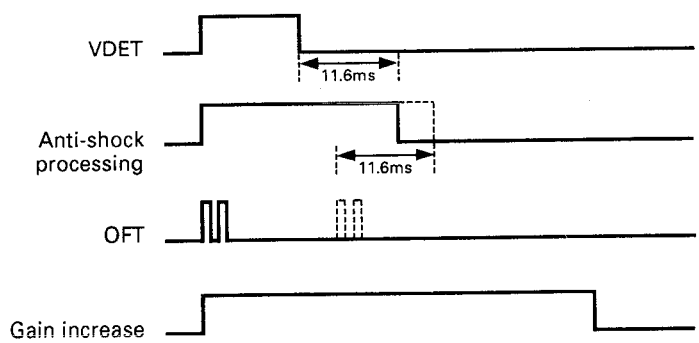

Anti-shock processing period

Fail-safe

In case the absolute value of the low-frequency component of the loop filter increases abnormally due to a certain reason, the low-frequency component is clipped because there is a fear of run-away of tracking servo.

- The threshold absolute value of the low-frequency component for activating the fail-safe function can be set with the SYS command.
- The fail-safe function is canceled for approx. 280ms after the completion of kick operation.

Polarity of KICK

The focusing lens moves toward the inner direction of the disc while KICK is "H".

CIRCUIT DESCRIPTION

IC3: SM5873BS (X32-4010-00) D/A converter

Block diagram

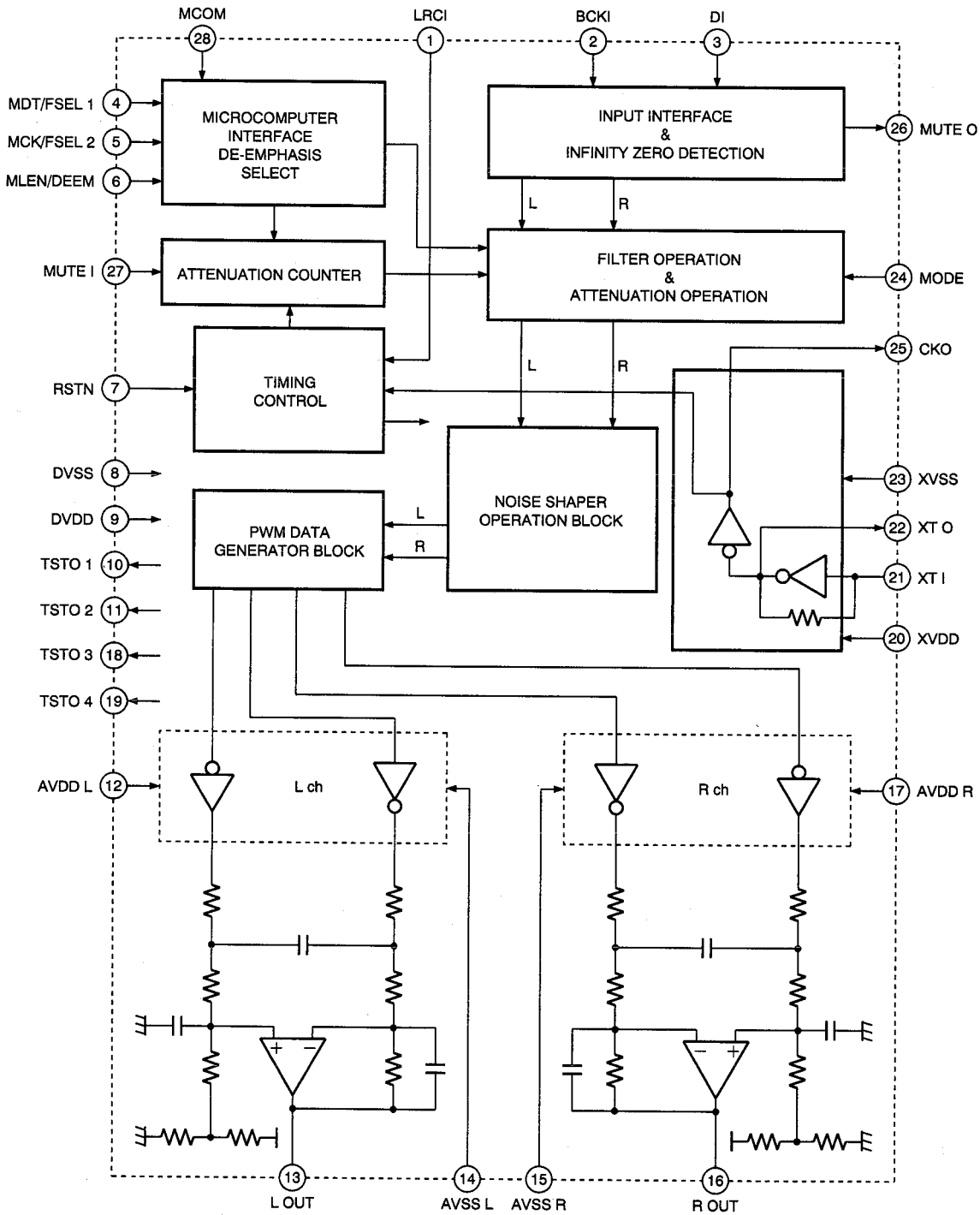

CIRCUIT DESCRIPTION

IC3: SM5873BS (X32-4010-00)

Terminal description

Pin No.	Pin name	I/O	Function
1	LRCI	Ip	Sample late clock (fs) of input data H: Lch L: Rch
2	BCKI	Ip	Bit clock of input data
3	DI	Ip	Data input
4	MDT/FSEL1	Ip	MCOM=H:MDT Microcomputer interface data
5	MCK/FSEL2	Ip	MCOM=H:MCK Microcomputer interface clock
6	MLEN/DEEM	Ip	MCOM=H: MLEN Microcomputer interface latch enable. MCOM=L: DEEM De-emphasis control (DEEM=H/L: De-emphasis ON/OFF)
7	RSTN	Ip	System reset (RSTN=H: Normal mode) (RSTN=L: Reset)
8	DVSS	–	Digital ground (0V)
9	DVDD	–	Digital VDD (5V)
10	TSTO1	O	Test output 1 (open)
11	TSTO2	O	Test output 2 (open)
12	AVDDL	–	Lch analog VDD (5V)
13	LOUT	O	Lch analog output
14	AVSSL	–	Lch analog ground (0V)
15	AVSSR	–	Rch analog ground (0V)
16	ROUT	O	Rch analog output
17	AVDDR	–	Rch analog VDD (5V)
18	TSTO3	O	Test output 3 (open)
19	TSTO4	O	Test output 4 (open)
20	XVDD	–	X'tal VDD (5V)
21	XTI	I	Oscillator input (System clock input: 384 fs)
22	XTO	O	Oscillator output
23	XVSS	–	X'tal ground (0V)
24	MODE	Ip	Dizzer adding switching (MODE=H: With dizzer adding) (MODE=L: Without dizzer adding)
25	CKO	O	Oscillator output clock (384 fs)
26	MUTEO	O	Infinity zero detection output
27	MUTEI	Ip	Mute input (MUTE=H: DF output soft mute ON) (MUTE=L: DF output soft mute OFF)
28	MCOM	Ip	Interface selection control (MCOM=-H: MDT, MCK, MLEN) (MDT/FSEL1, MCK/FSEL2, MLEN/DEEM) (MCOM=L: FSEL1, FSEL2, DEEM)

(Ip means input pin with pull-up resistor. When the pin fixed to H, connect VDD is recommended.)

FSEL mode: relation of FSEL1 (pin 4) and FSEL2 (pin 5)
When MCOM=L

	FSEL2	
FSEL1	L	H
L	44.1kHz	48.0kHz
H	(44.1kHz)	32.0kHz)

CIRCUIT DESCRIPTION

IC6: 78002BGC603-AB8 (X32-4010-00)
MECHA Microcomputer

System configuration

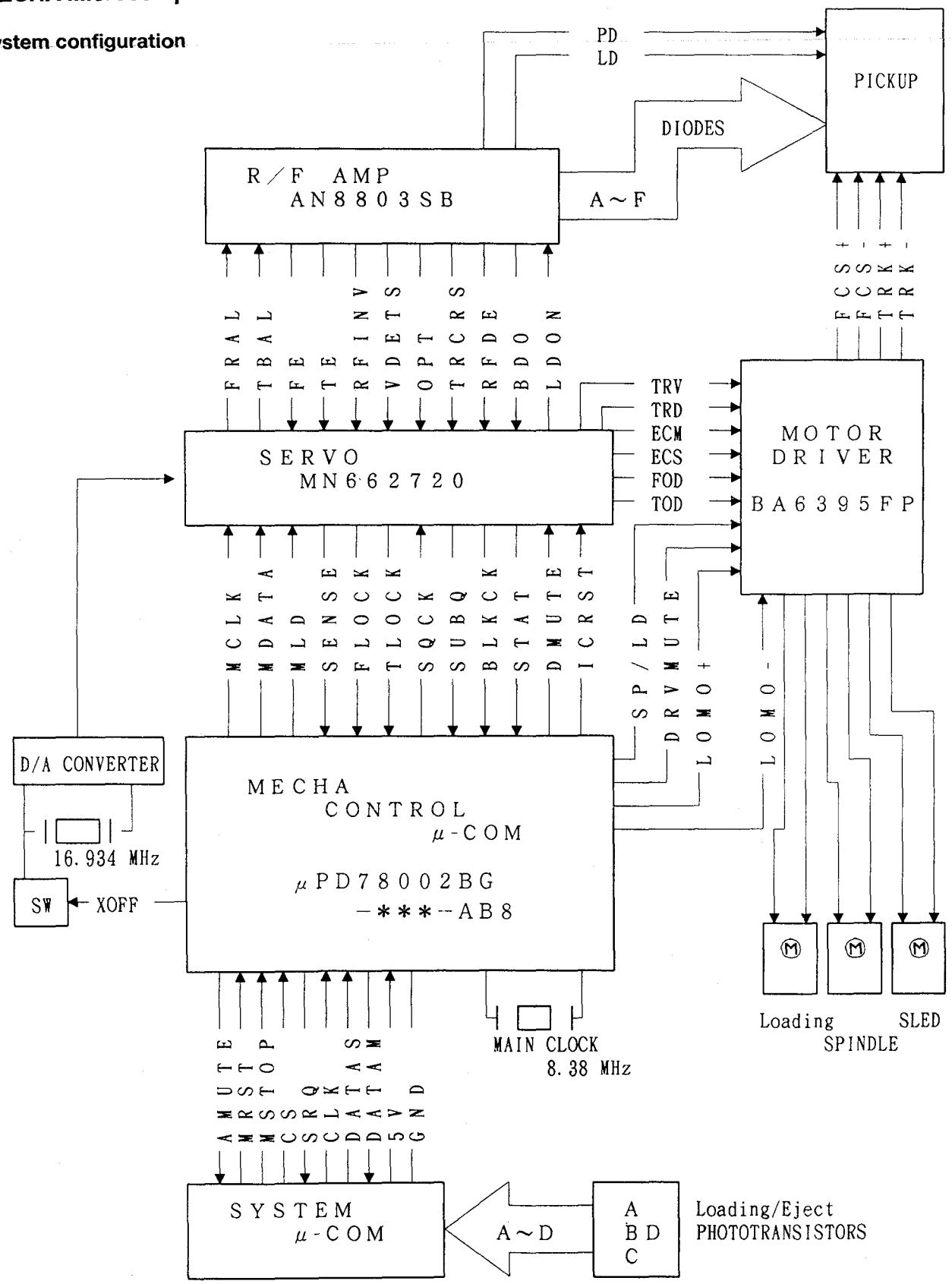

CIRCUIT DESCRIPTION

IC6: 78002BGC603-AB8 (X32-4010-00)

Microcomputer pin layout

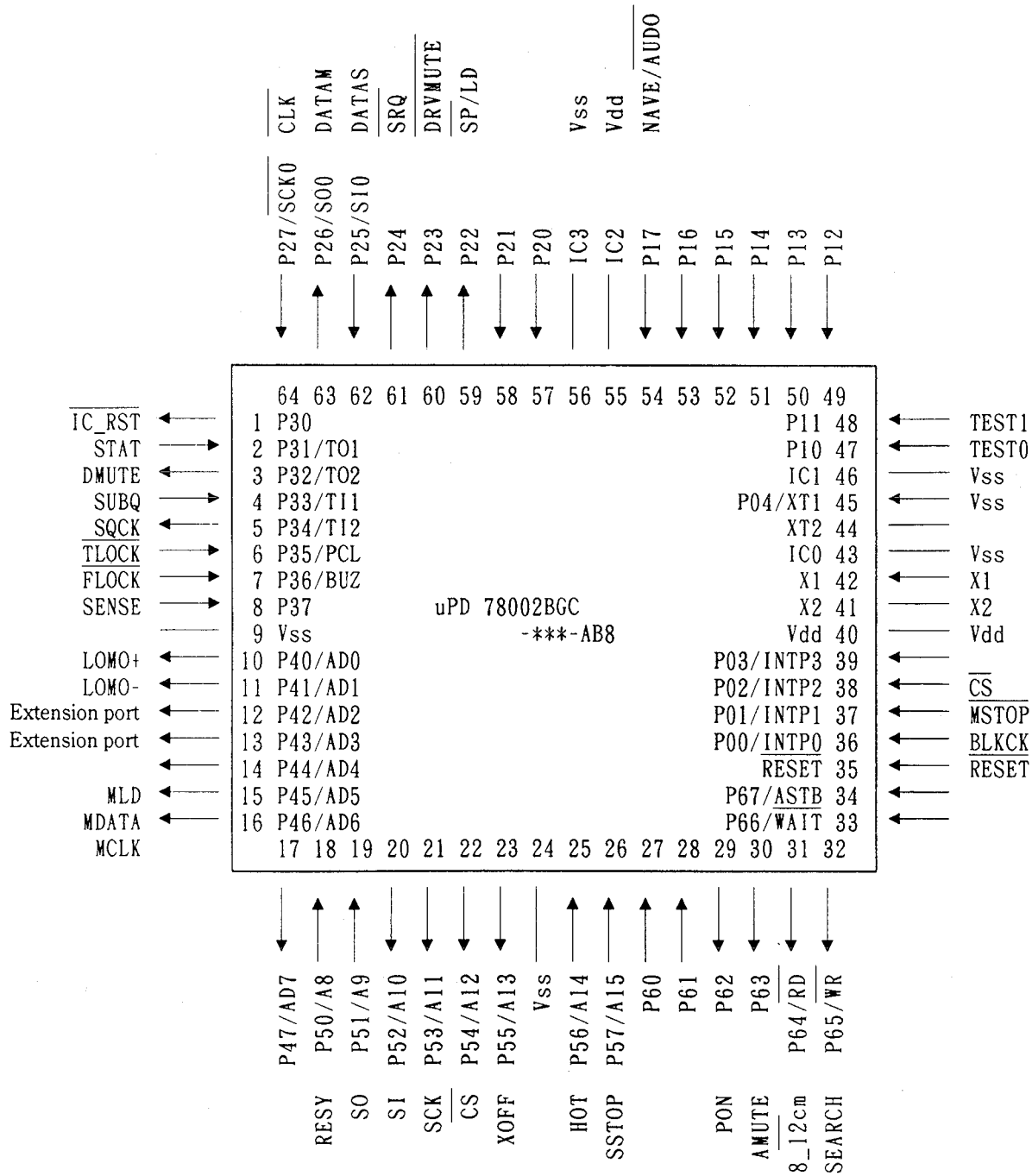

Note: Pins 27 to 30 are N CH open drain terminals.

CIRCUIT DESCRIPTION

IC6: 78002BGC603-AB8 (X32-4010-00)

Terminal description

Pin	Pin Name	Name	I/O	Function
1	P30/TO0	RST	O	• Servo IC reset terminal. Used when the power is turned ON.
2	P31/T01	STAT	I	• Status signal from servo IC (MN662720). To be monitored when applying control. (CRC, CUE, CLVS, TTSTOP, FCLV, SQOK)
3	P32/TI1	DMUTE	O	• Digital muting terminal of servo IC (MN662720). "H" for ON.
4	P33/T11	SUBQ	I	• Subcode Q code input from servo IC (MN662720).
5	P34/T12	SQCK	O	• External clock output for subcode Q register of servo IC (MN662720). Clock output = 2 MHz.
6	P35/PCL	TLOCK	I	• Tracking servo locking input signal from servo IC (MN662720). "L" when locked.
7	P36/BUZ	FLOCK	I	• Focusing servo locking input signal from servo IC (MN662720). "L" when locked.
8	P37	SENSE	I	• Sense signal from servo IC (MN662720). To be monitored when applying control. (OFT, FESL, NACEND, NAJEND, POSAD, SFG)
9	Vss			
10	P40/AD0	LOMO+	O	• Control of the loading/ejection motor of Mechanism unit. This terminal is an extension port controlled by the system microcomputer.
11	P41/AD1	LOMO-	O	• Control of the loading/ejection motor of Mechanism unit. This terminal is an extension port which is controlled by the system microcomputer. LOMO(+) / LOMO(-): Open 0 0; Load 0 1; Eject 1 0; Brake 1 1 Set open when spindle operation.
12	P42/AD2	Extension port 2	O	• This terminal is an extension port which can be controlled by the system microcomputer.
13	P43/AD3	Extension port 3	O	• This terminal is an extension port which can be controlled by the system microcomputer.
14	P44/AD4	MLD	O	• Microcomputer command loading signal to servo IC (MN662720). "L" for loading (Mechanism μ-COM) → (Servo IC)
15	P45/AD5	MDATA	O	• Microcomputer command data signal to servo IC (MN662720). (Mechanism μ-COM) → (Servo IC)
16	P46/AD6	MCLK	O	• Microcomputer command clock signal to servo IC (MN662720). Latched at "positive going". (Mechanism μ-COM) → (Servo IC)
17	P47/AD7	Not used	O	
18	P50/A8	RESY	I	• Re-sync signal of frame sync of servo IC (MN662720). "H": Synchronized. "L": Out of sync.
19	P51/A9	SO (anti-shock)	I	Not used. Connected to GND.
20	P52/A10	SI (anti-shock)	O	Not used.
21	P53/A11	SCK (anti-shock)	O	Not used.

CIRCUIT DESCRIPTION

IC6: 78002BGC603-AB8 (X32-4010-00)

Pin	Pin Name	Name	I/O	Function
22	P54/A12	CS(anti-shock)	O	Not used.
23	P55/A13	XOFF	O	• Control terminal which turns ON/OFF the X'tal oscillator circuitry for the servo IC and anti-shock memory IC. "L" for ON, "H" for OFF.
24	Vss			
25	P56/A14	HOT	I	• Detection of temperature rise in and near the servo circuitry. "H" in case of hot error.
26	P57/A15	SSTOP	I	• Detection of sled of the Mechanism unit. "L" with innermost position.
27	P60	Not used	I	
28	P61	Not used	I	
29	P62	PON	O	• Servo-related IC power control terminal. "H" for OFF, "L" for ON.
30	P63	AMUTE	O	• Analog muting of servo IC (MN662720). "L" for ON. • This circuit is dealt with by the system side.
31	P64/RD	8_12cm	O	Not used.
32	P65/WR	SEARCH	O	Not used.
33	P66/WAIT	Not used	I	
34	P67/ASTB	Not used	I	
35	RESET		I	• Mechanism microcomputer reset terminal. "L" when reset.
36	P00/INTP0/TI0	BLKCK	I	• Subcode block clock signal from servo IC (MN662720). [(fBLACK) = 75 Hz during normal playback]
37	P01/INTP1	MSTOP	I	• Mechanism microcomputer standby control. "L" for standby.
38	P02/INTP2	CS	I	• Communication request from system microcomputer. Interrupt occurs at negative going. (System μ-COM) → (Mechanism μ-COM)
39	P03/INTP3	Not used	I	
40	VDD			
41	X2	X2		• Main clock of microcomputer.
42	X1	X1	I	• Main clock of microcomputer.
43	IC0(VDD)	IC0	-	
44	XT2	XT2	-	• Sub-clock of microcomputer.
45	P04/XT1	XT1	I	• Sub-clock of microcomputer.
46	IC1	IC1	-	
47	P10	TEST0	I	• Terminal for use in test mode.
48	P11	TEST1	I	• Terminal for use in test mode.
49	P12	Not used	I	
50	P13	Not used	I	
51	P14	Not used	I	
52	P15	Not used	I	
53	P16	Not used	I	
54	P17	NAVI/AUD		• Mechanism microcomputer destination judgment terminal. *1 "H" for navigation. *2 "L" for audio.

CIRCUIT DESCRIPTION

IC6: 78002BGC603-AB8 (X32-4010-00)

Pin	Pin Name	Name	I/O	Function
55	IC2	IC2	-	
56	IC3	IC3	-	
57	P20	Not used	I	• Unused terminal.
58	P21/SO1	Not used	I	• Unused terminal.
59	P22/SCK1	SP/LD	O	• Spindle/loading motor switching. Switches the usage of servo driver between spindle motor drive and loading motor drive. Loading → "H" Spindle → "L"
60	P23/STB	DRVMUTE	O	• Driver muting. Mutes the servo driver while the master clock is stopped in other cases than loading. Muting ON → "L"
61	P24/BUSY	SRQ	O	• Request of communication to mechanism microcomputer.
				(Mechanism μ-COM) → (System μ-COM)
62	P25/SI0/SB0	DATAS	I	• Data from system microcomputer. (System μ-COM) → (Mechanism μ-COM)
63	P26/SO0/SB1	DATAM	O	• Data terminal from mechanism microcomputer. (Mechanism μ-COM) → (System μ-COM)
64	P27/SCK0	CLK	I	• Clock from system microcomputer. (System μ-COM) → (Mechanism μ-COM)

CIRCUIT DESCRIPTION

IC7: BA6795FP (X32-4010-00) BLT driver

Block diagram

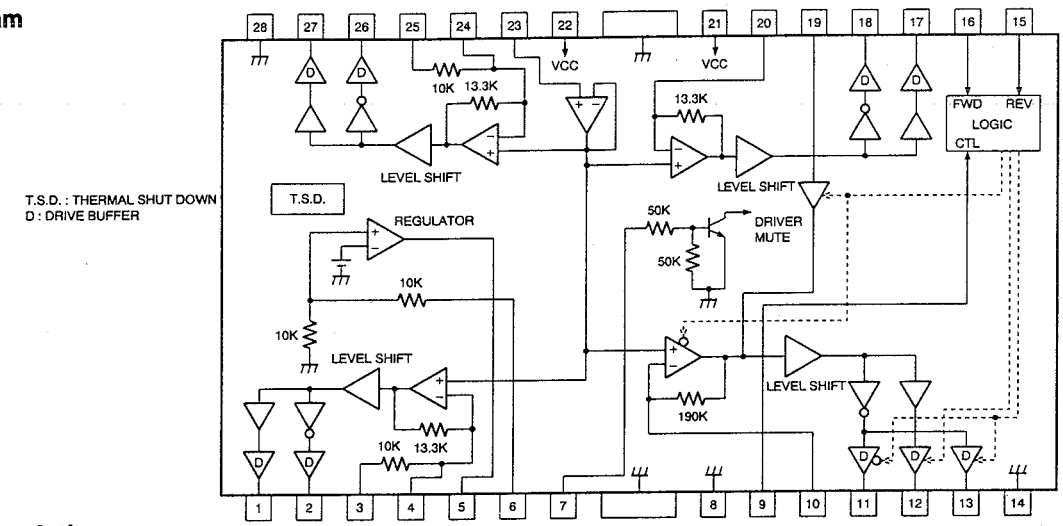

Terminal description

Pin No.	Pin name	I/O	Function
1	OUT1-1	O	CH1 minus output
2	OUT1-2	O	CH1 plus output
3	IN1-1	I	CH1 input
4	IN1-2	I	CH1 input for gain adjustment
5	Vreg-B	O	External Tr connection to base
6	Vreg-Out	O	Regulated voltage output (External Tr connection for collector)
7	MUTE	I	Mute control pin
8	GND	–	Ground
9	CTL	I	Loading/spindle switching pin
10	IN2	I	CH2 input for gain adjustment
11	OUT2-1	O	CH2 plus output
12	OUT2-2	O	CH2 minus output/Loading plus output
13	OUT2-3	O	Loading minus output
14	GND	–	Sub straight ground
15	REV	I	Loading reverse input pin
16	FWD	I	Loading forward input pin
17	OUT3-1	O	CH3 minus output
18	OUT3-2	O	CH3 plus output
19	LDIN	I	Loading input
20	IN3	I	CH3 input for gain adjustment
21	VCC	–	VCC
22	VCC	–	VCC
23	VrefIN	I	Bias AMP input pin
24	IN4-2	I	CH4 input for gain adjustment
25	IN4-1	I	CH4 input
26	OUT4-2	O	CH4 plus output
27	OUT4-1	O	CH4 minus output
28	GND	–	Sub straight GND

Note 1: Plus/minus outputs mean the phase against input.
Note 2: Loading forward/reverse mean the phase against mode.

KDC-8020R

MECHANISM DESCRIPTION

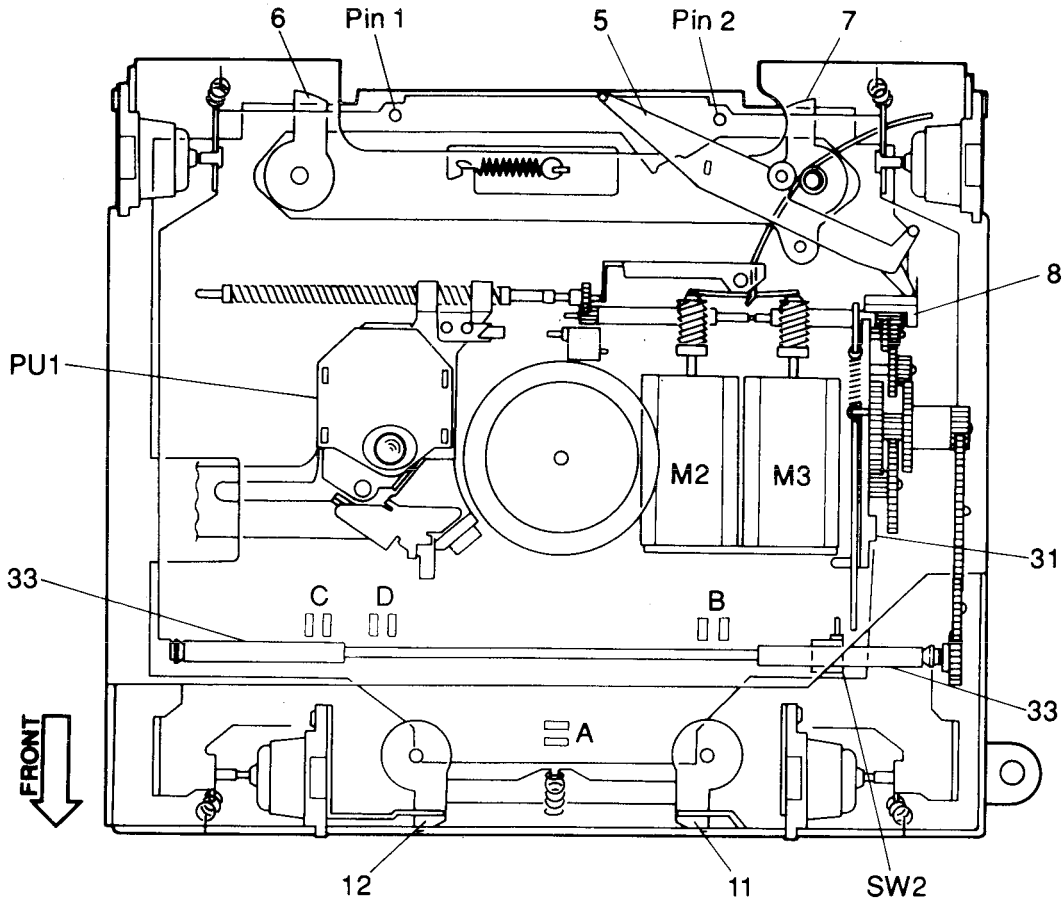

MECHANISM DESCRIPTION

CD mechanism disassembly procedure

Removing the loading roller ass'y

1. Remove the 2 springs (❶).
2. Remove the 2 screws (❷) then remove the damper (❸).
3. Remove the 2 screws (❹) then remove the cover by sliding it horizontally (❺).
4. Remove the 3 springs (❻) then remove the clamp lever (❼).
5. Remove the loading roller ass'y (❽).

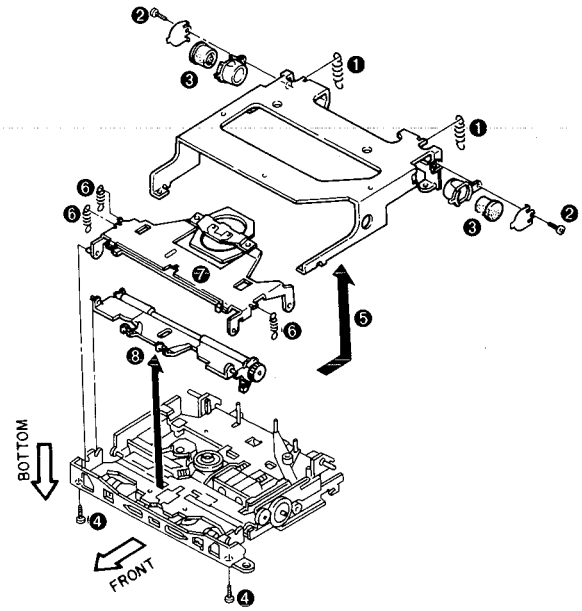

Removing the circuit board

1. Melt solder on the 4 positions on the loading motor and spindle motor (❾).
2. Remove the 4 screws (❿).
3. Remove the flexible wire (⓫) then remove the circuit board.

※ When attaching the circuit board, slide the pickup ass'y slightly outward to prevent damage to SW1 (⓬).

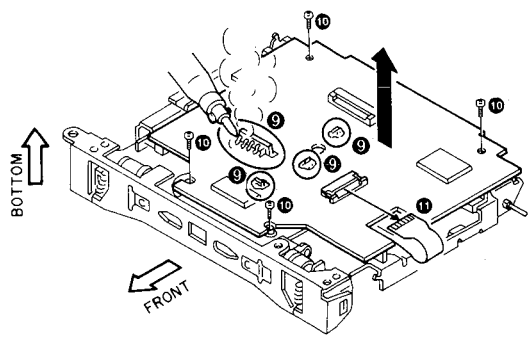

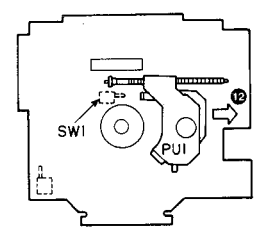

Removing the gear ass'y

1. Remove the 2 screws (⓭) then remove the cam plate.

※ When attaching the cam plate, be careful about the position of the hole (⓮).

2. Remove the screw (⓯) then remove the push plate.
3. Remove the spring (⓰).
4. Remove the screw (⓱) then remove the plate spring (⓲).
5. Remove the worm gear (⓳).
6. Remove the 2 screws (⓴) then remove the gear ass'y.

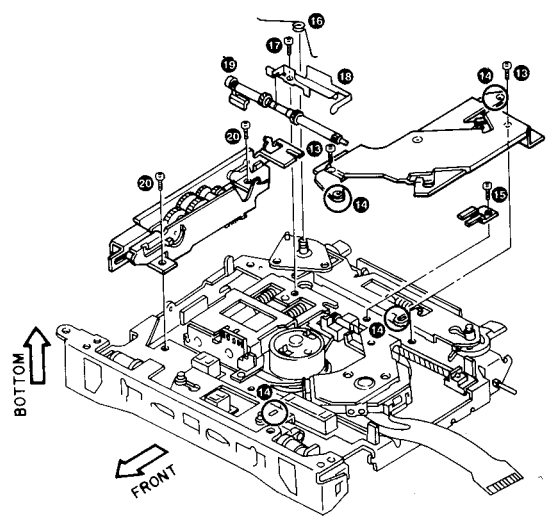

MECHANISM DESCRIPTION

Removing the spindle motor

1. Remove the 2 screws (㉑) then remove the loading motor ass'y.
2. Remove the pickup block by sliding it horizontally (㉒).
3. Remove the 2 screws (㉓) then remove the spindle motor.

※ When attaching the spindle motor, position it so that the (+) terminal comes on the worm gear side (㉔).

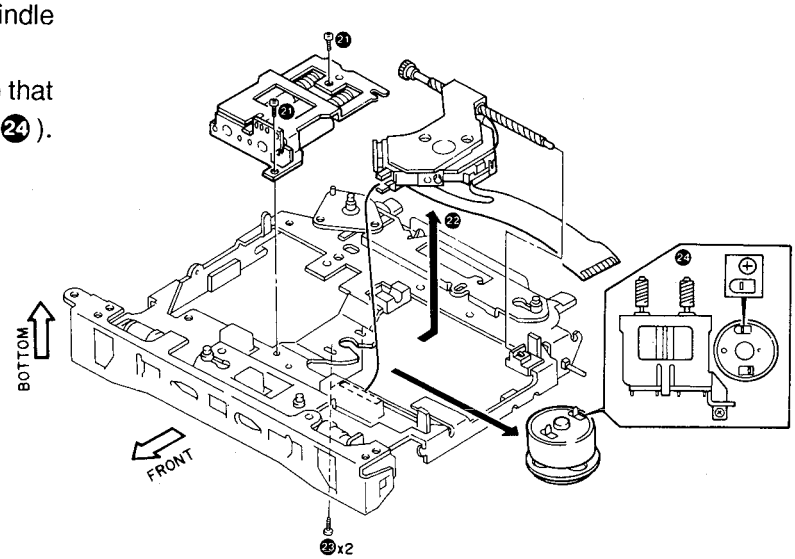

Removing the loading motor and sled motor

1. Remove the 2 screws (㉕).
2. Melt solder on 5 positions (㉖) and remove the motor and bracket.

※ When attaching the loading motor and sled motor, position them so that the surface on which characters are printer comes on the bracket side (㉗).

※ When attaching the worm gear on the loading motor or sled motor, attach so that the top of the worm gear projects by 12.5 mm (㉘).

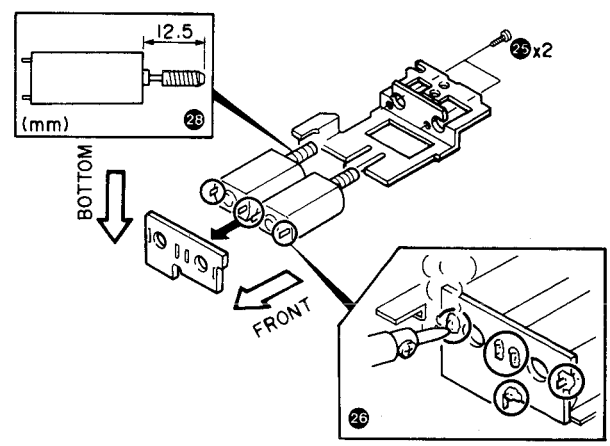

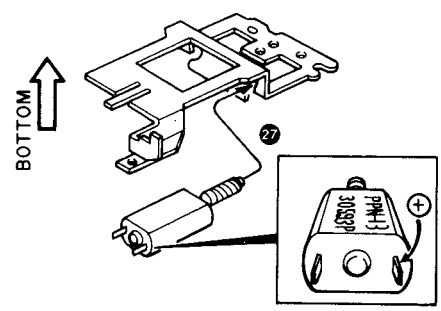

MECHANISM DESCRIPTION

Mechanism operation description

1. Loading

1. Place a CD (Compact Disc).
2. Photosensors A, B and D detect the insertion of CD.

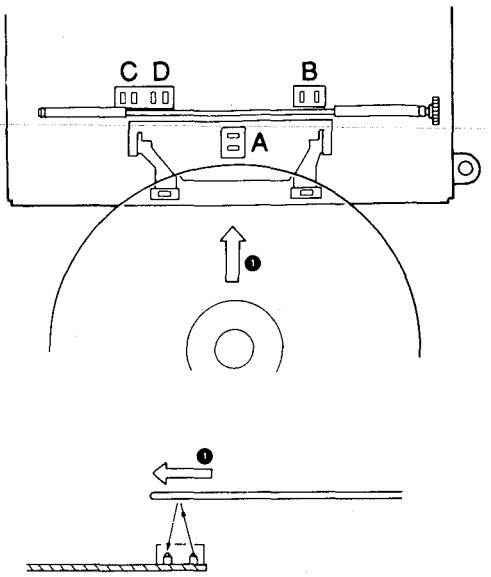

3. When three photosensors A, B, C and D turn ON, the μ-COM outputs instruction to start rotation of the loading motor (❷).
4. The rotation is transmitted to the worm gear (21) then to the loading roller (33) (❸).
5. The CD is pulled in by the friction of the rubber roller (33).

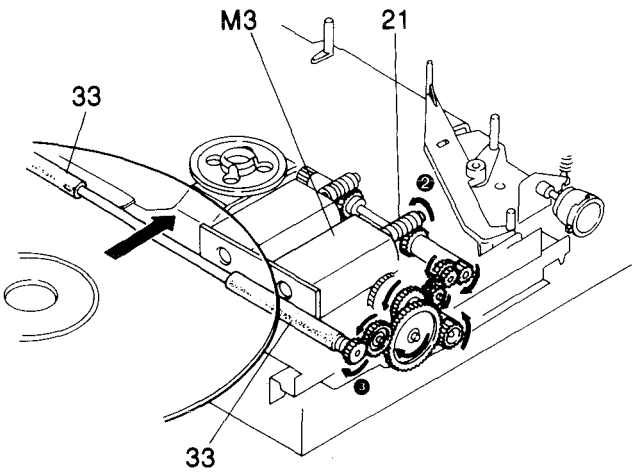

6. When the CD hits the positioning pin (pins 1, 2), the lever (5) is turned by the CD in the direction of the arrow (❹).
7. The lever (5) pushes the trigger arm (8) (❺).

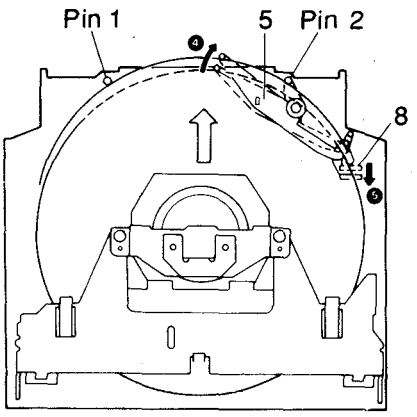

MECHANISM DESCRIPTION

2. Chucking

1. When the trigger arm (8) is pressed (❶), the rack (31) and gear (26) mesh with each other and move the slider (15) by means of the arm (19) (❷).
2. Interlocked with the slider (15), the mechanism lock mechanism and clamp mechanism are activated.

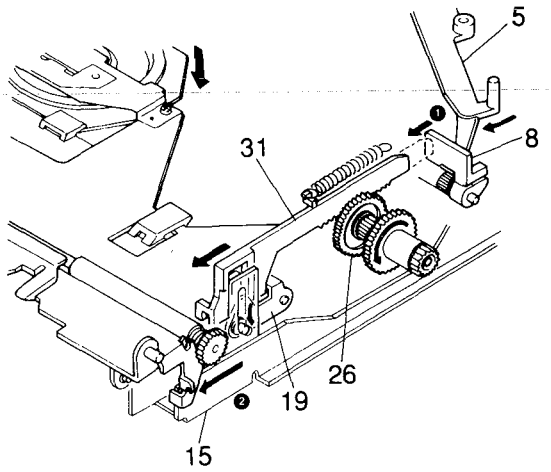

3. With the mechanism lock mechanism, the movement of the slider (15) in the direction of the arrow (❸) releases the 4 lock levers (7, 6, 11, 12) (❹ , ❺ , ❻ , ❼) and the mechanism deck is floated.

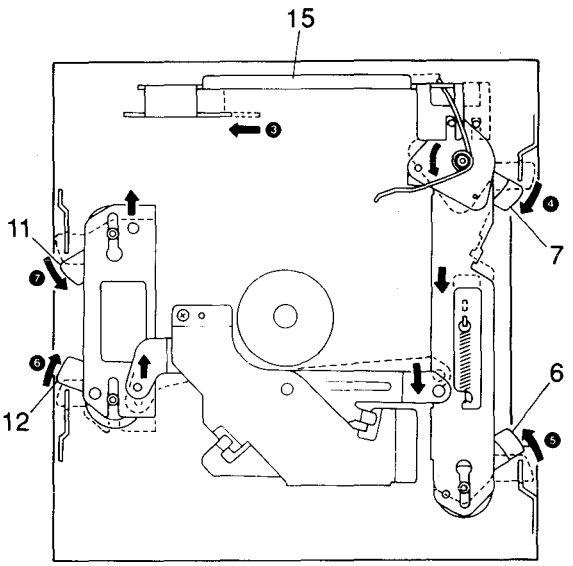

4. With the clamp mechanism, the movement o the slider (15) (❽) moves the clamp holder (58) downwards (❾) around the fulcrum (A), chucking the CD onto the turntable. The roller holder (17) turns around the fulcrum (B) (❿) to release the CD.

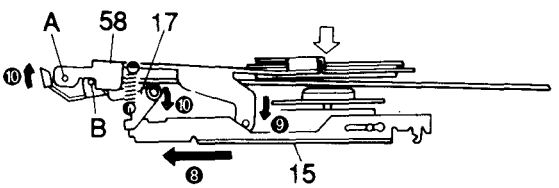

MECHANISM DESCRIPTION

5. After the operation above, the projection on the rack (31) pushes the down switch (SW2) (⓫) to stop the loading motor (M3).

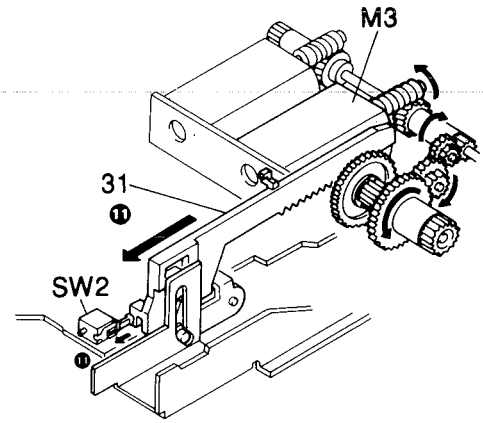

3. Ejection

1. When the eject button is pressed, the loading motor (M3) rotates in the reverse direction (❶).
2. The rack (31) moves into the direction of the arrow (❷), causing the clamp mechanism and mechanism lock mechanism to move in the opposite directions to loading (❸ , ❹ , ❺ , ❻ , ❼), and the mechanism deck is fixed and the CD is ejected(❽).

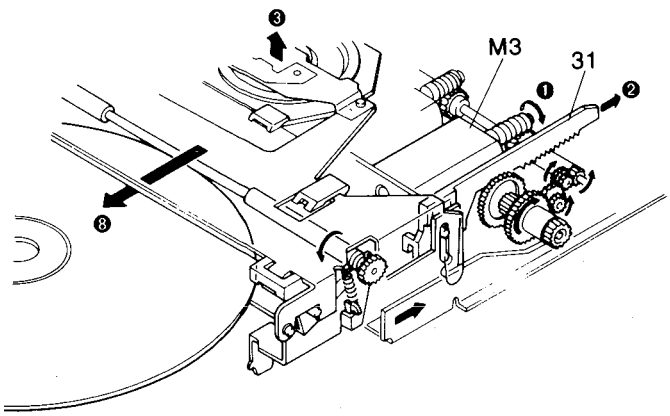

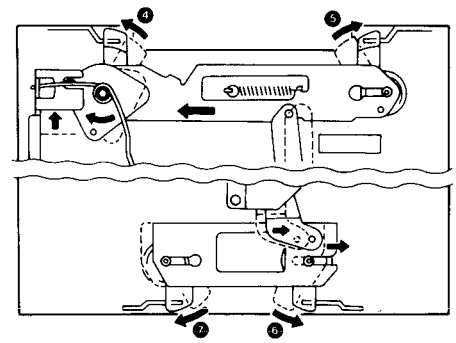

3. The motor (M3) stops at the moment the CD is ejected to outside the position of sensor C.

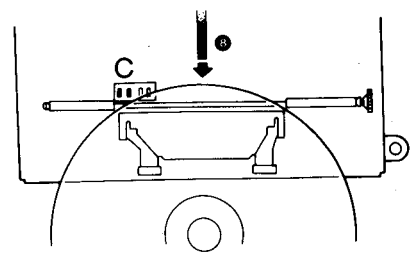

KDC-8020R

MECHANISM DESCRIPTION

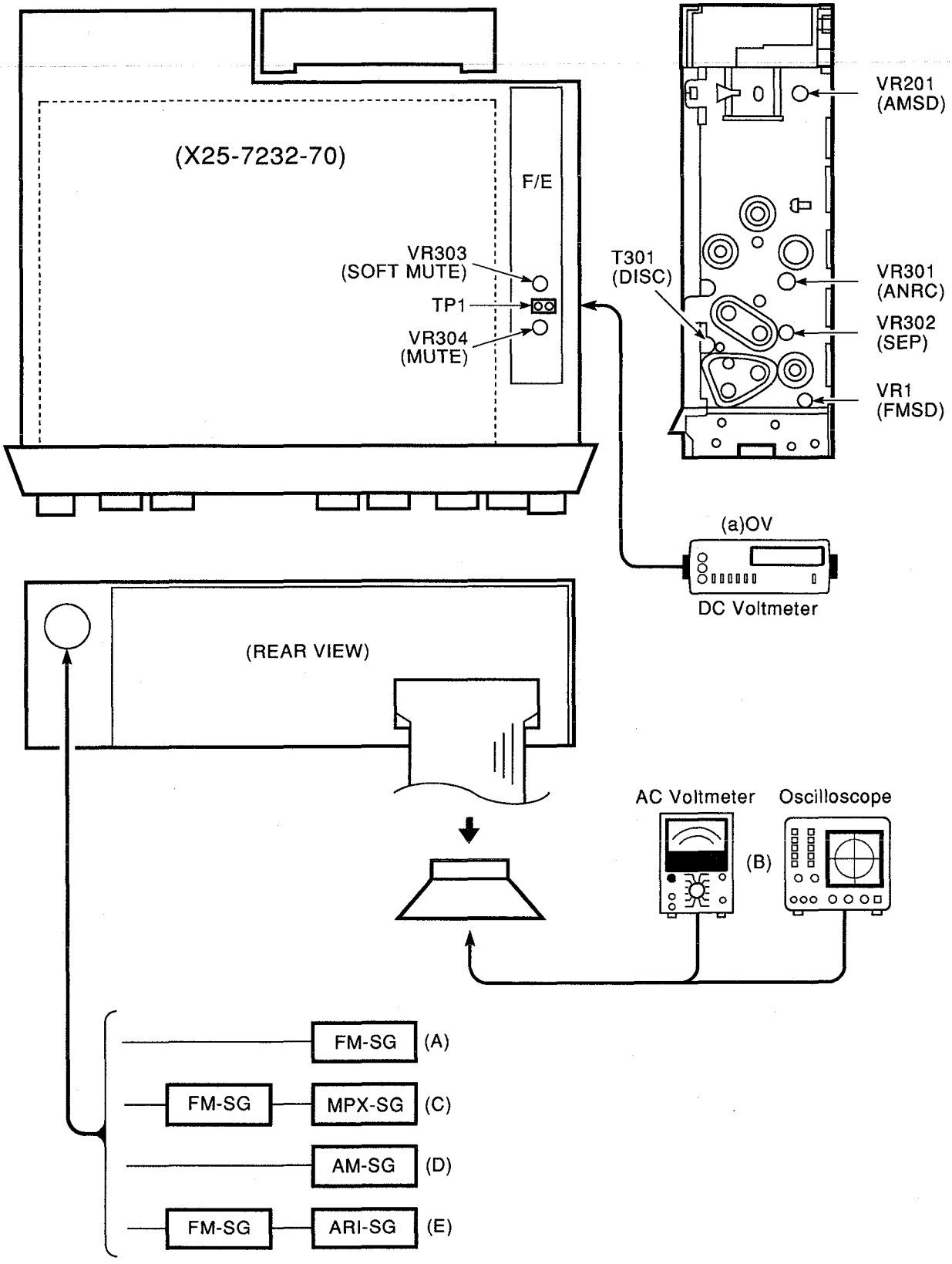

ADJUSTMENT

No.	ITEM	INPUT SETTINGS	OUTPUT SETTINGS	TUNER (RECEIVER)	ALIGNMENT POINTS	ALIGN FOR	FIG.
FM SECTION							
1	DISCRI-MINATOR	(A) 98.1 MHz 0 dev 60 dBμ (ANT input)	Connect a DC voltmeter to pin 2 of TP1 (TU1, X25-)	FM 98.1 MHz	T301 (TU1 in X25-)	0 V	(a)
2	SOFT MUTE LEVEL	(A) 98.1 MHz 1 kHz, ±40 kHz dev 60 dBμ → No input	(B)	FM 98.1 MHz	VR303 (TU1 in X25-)	Assuming that the output is 0 dB with an input of 60 dBμ, ajust so that the output level is –25 dB.	
3	SEPARATION	(C) 98.1 MHz 1 kHz, ±40 kHz dev Pilot: ±6.0 kHz dev Selector: L or R 60 dBμ (ANT input)	(B)	FM 98.1 MHz	VR302 (TU1 in X25-)	Adjust it so that the crosstalk from L to R and R to L become minimum.	
4	ANRC	(C) 98.1 MHz 1 kHz, ±40 kHz dev Pilot: ±6.0 kHz dev Selector: L or R 35 dBμ (ANT input)	(B)	FM 98.1 MHz	VR301 (TU1 in X25-)	Separation 10 dB	
5	SEEK STOP LEVEL	(A) 98.1 MHz 0 dev 20 dBμ (ANT input)	TEST MODE: ON	FM 98.1 MHz	VR1 (X25-)	Adjust so that the "►II" indicator in the front panel are lit. Only "►" is lit: Too low Only "II" is lit: Too high	
6	MUTE LEVEL	(A) 98.1 MHz 0 dev 5 dBμ (ANT input)	TEST MODE: ON	FM 98.1 MHz	VR304 (TU1 in X25-)	Adjust so that the "SCN" indicator in the front panel are lit.	
AM SECTION							
[1]	SEEK STOP LEVEL	(D) 999 kHz 0% mod 35 dBμ (ANT input)	–	AM 999 kHz	VR201 (TU1 in X25-)	STOP	

*The CD servo unit (X32-) is adjustment-free.
There is no point to be adjusted.

*Test mode : Turn power ON while holding the ⏏ and PTY keys depressed. (All of the LCD elements light.)
Then, press the SRC key.
To quit : Power OFF.

ABGLEICH

Nr.	GEGENSTAND	EINGANGS-EINSTELLUNGEN	AUSGANGSEIN-STELLUNGEN	TUNER (RECEIVER)	ABGLEICH-PUNKTE	ABGLEICHEN AUF	ABB.
FM (UKW)-EMPFANGSTEIL							
1	DISCRIMINATOR (DISKRIMI-NATOR)	(A) 98,1 MHz 0 Hub 60 dBμ (ANT-Eingang)	Ein Gleichstrom-Voltmeter an Stift 3 von TP1 anschließen. (TU1, X25-)	FM (UKW) 98,1 MHz	T301 (TU1, X25-)	0 V	(a)
2	SOFT MUTE LEVEL (GERÄUSCH-DÄMPFUNGS-PEGEL)	(A) 98,1 MHz 1 kHz ±40 kHz Hub 60 dBμ - kein Eingang	(B)	FM (UKW) 98,1 MHz	VR303 (TU1, X25-)	Unter der Annahme, daß der Ausgang 0 dB bei einem Eingang von 60 dB beträgt, so einstellen, daß der Ausgangspegel –25 dB ist.	
3	SEPARATION (TRENNUNG)	(C) 98,1 MHz 1 kHz ±40 kHz Hub Pilot: ±6,0 kHz Hub Wähler: L oder R 60 dBμ (ANT-Eingang)	(B)	FM (UKW) 98,1 MHz	VR302 (TU1, X25-)	So einstellen, daß das Übersprechen von L zu R und von R zu L minimal wird.	
4	ANRC	(C) 98,1 MHz 1 kHz ±40 kHz Hub Pilot: ±6,0 kHz Hub Wähler: L oder R 35 dBμ (ANT-Eingang)	(B)	FM (UKW) 98,1 MHz	VR301 (TU1, X25-)	Trennung 10 dB	
5	SEEK STOP LEVEL (SUCHLAUF-STOPPEGEL)	(A) 98,1 MHz 0 Hub 20 dBμ (ANT-Eingang)	TESTMODUS: EIN	FM (UKW) 98,1 MHz	VR1 (X25-)	So einstellen, daß die Anzeige "►II" auf der Frontplatte leuchtet. Nur "►" leuchtet: zu niedrig Nur "II" leuchtet: zu hoch	
6	MUTE LEVEL (DÄMPFUNGS-PEGEL)	(A) 98,1 MHz 0 Hub 5 dBμ (ANT-Eingang)	TESTMODUS: EIN	FM (UKW) 98,1 MHz	VR304 (TU1, X25-)	So einstellen, daß die Anzeige "SCN" auf der Frontplatte leuchtet.	
AM (MW)-EMPFANGSTEIL							
[1]	SEEK STOP LEVEL (SUCHLAUF-STOPPEGEL)	(D) 999 kHz 0% Modulation 35 dBμ (ANT-Eingang)	–	AM (MW) 999 kHz	VR201 (TU1, X25-)	STOPP	

*Die CD-Servoeinheit (X32-) ist einstellungsfrei.
Es gibt keinen Punkt, der eingestellt werden muß.

*Testmodus : Die Spannungsversorgung einschalten, während die Tasten ⏏ und PYT gedrückt gehalten werden. (Alle Elemente des Flüssigkristalldisplays leuchten.)
Dann die Taste SRC drücken.
Deaktivieren : Spannungsversorgung ausschalten.

PC BOARD (Component side view)

SWITCH UNIT (X13-8662-70)

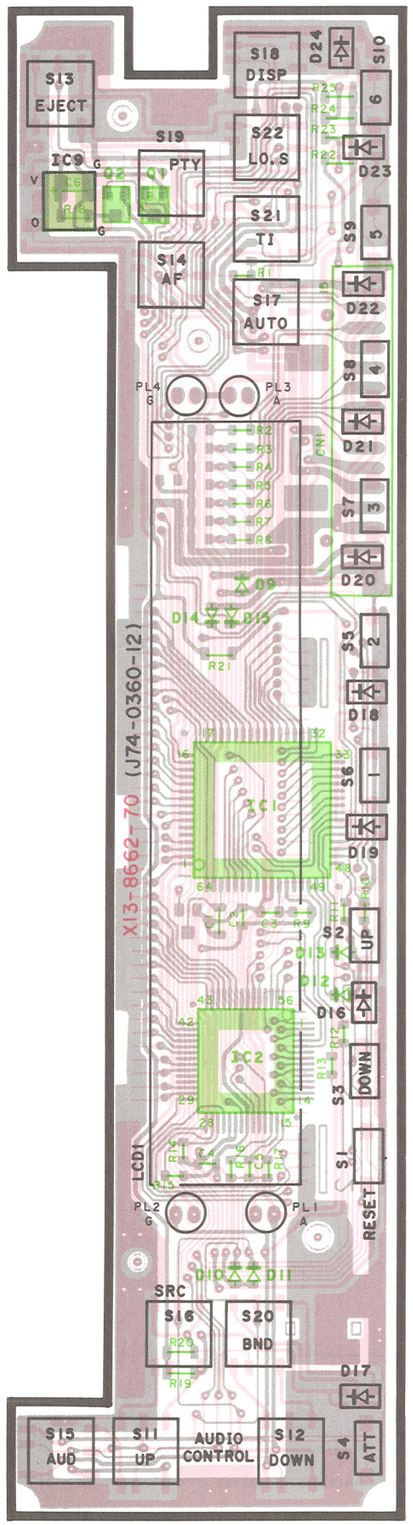

45

ELECTRIC UNIT (X25-7232-70)

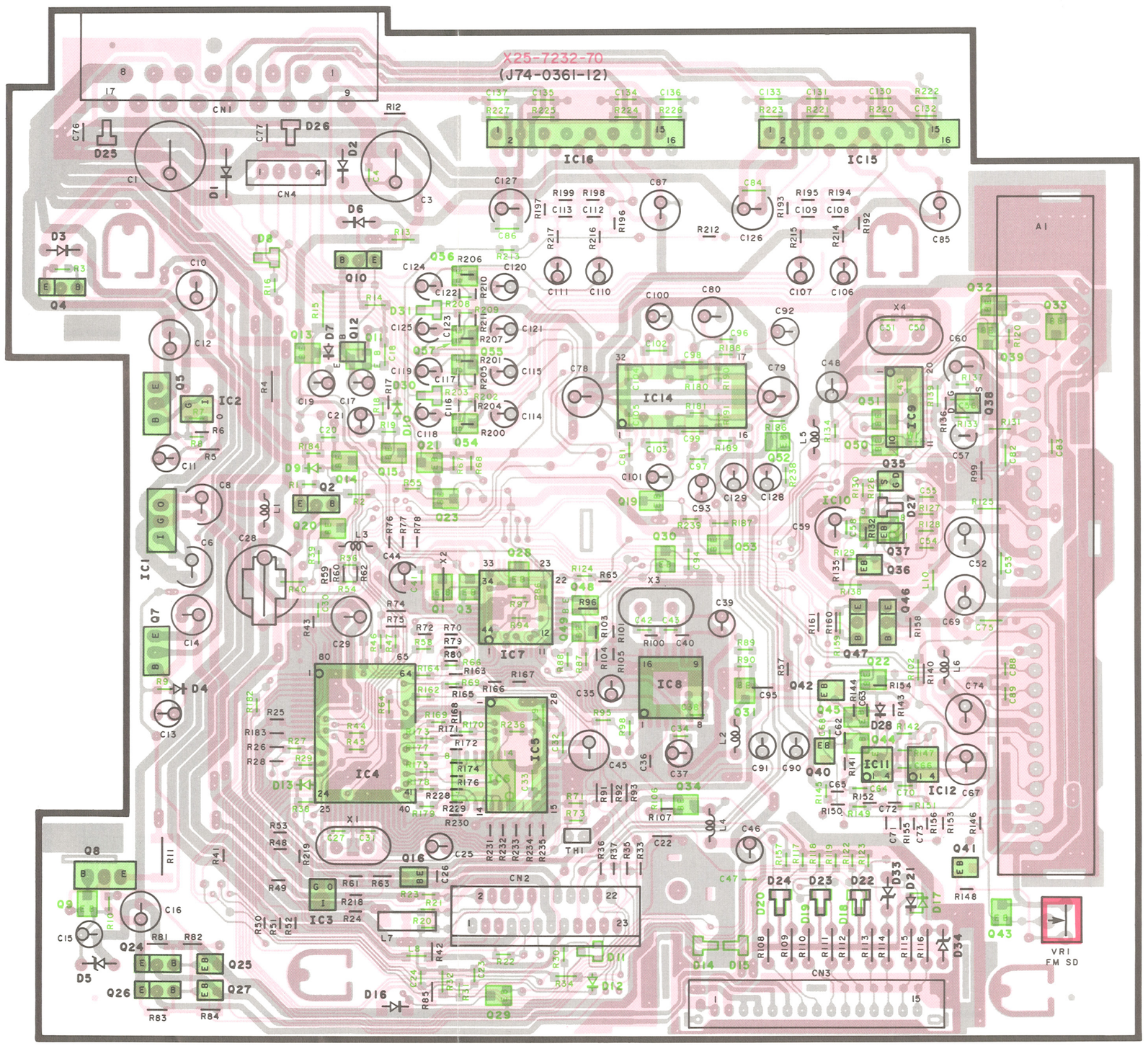

46

Refer to the schematic diagram for the values of resistors and capacitors.

PC BOARD (Foil side view)

ELECTRIC UNIT (X25-7232-70)

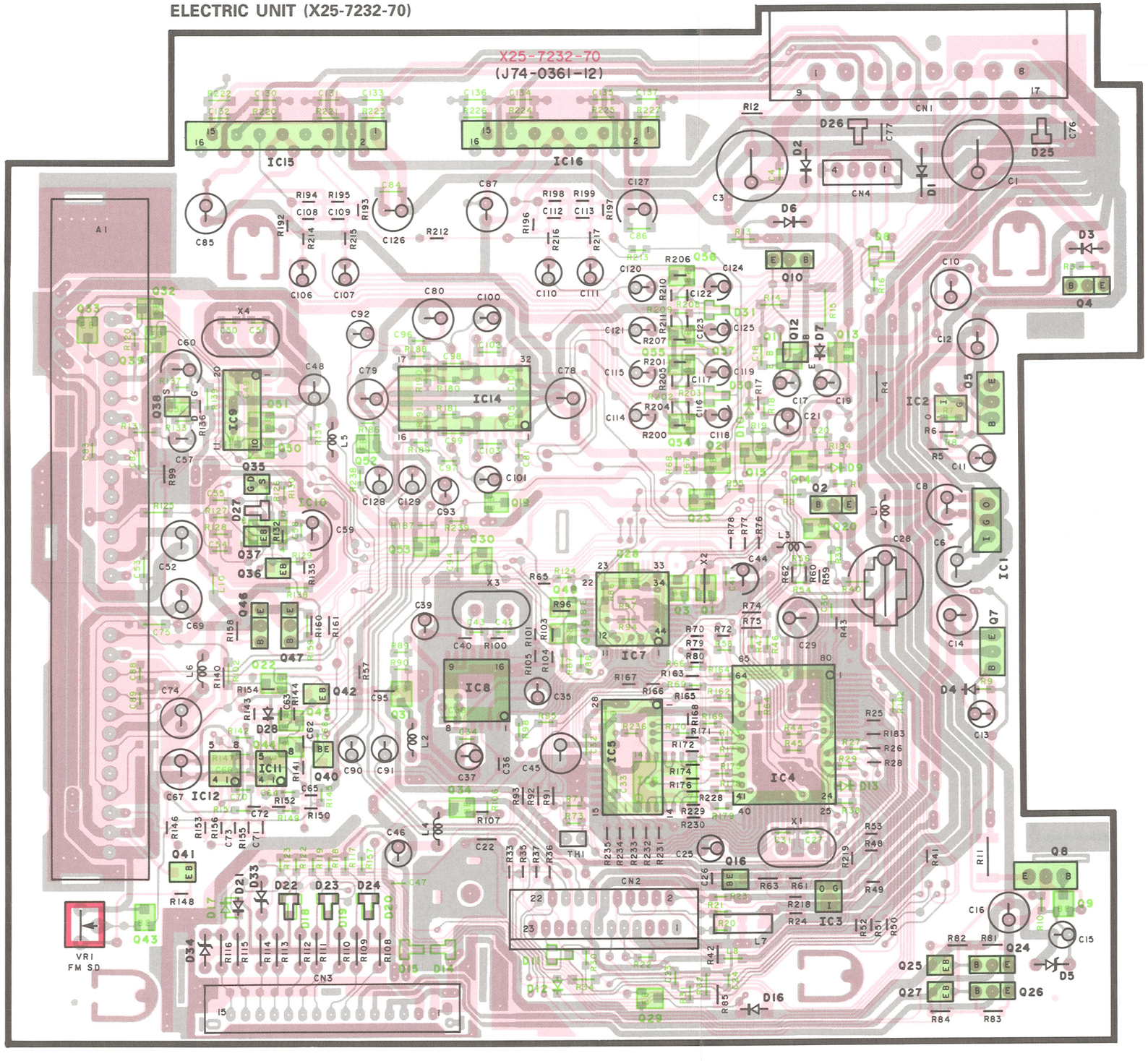

SWITCH UNIT (X13-8662-70)

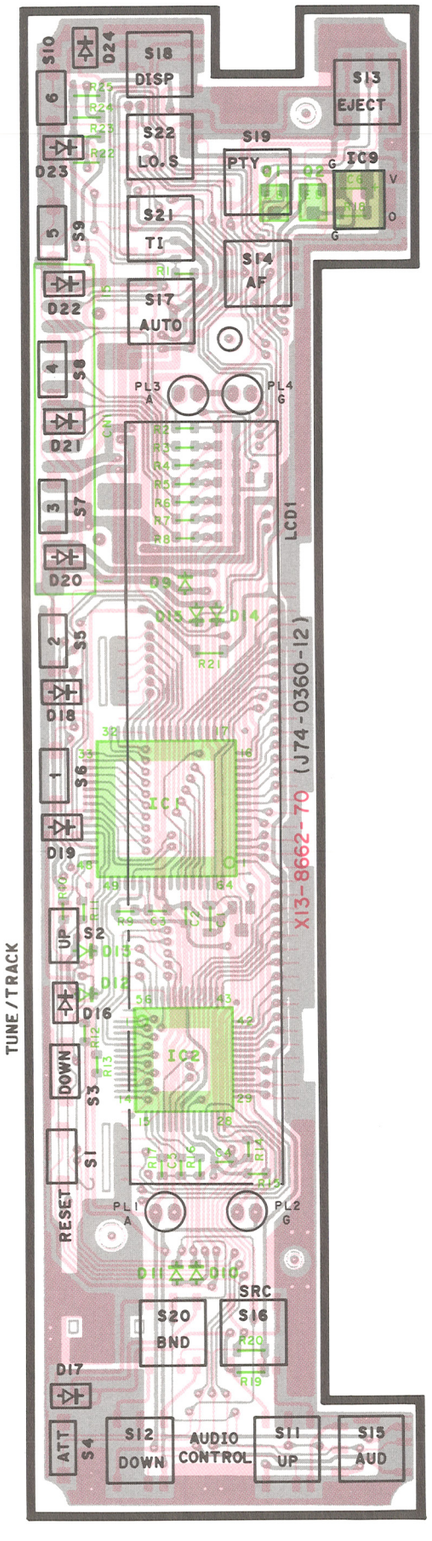

Refer to the schematic diagram for the values of resistors and capacitors.

PC BOARD (Component side view)

MECHANISM Ass'y
(X92-3010-01)

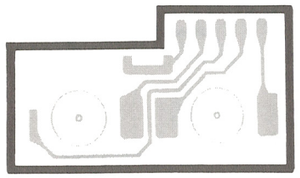

X92-3010-01
(J74-0331-02)

CD PLAYER UNIT
(X32-4010-00)

X32-4010-00 (J74-0330-32)

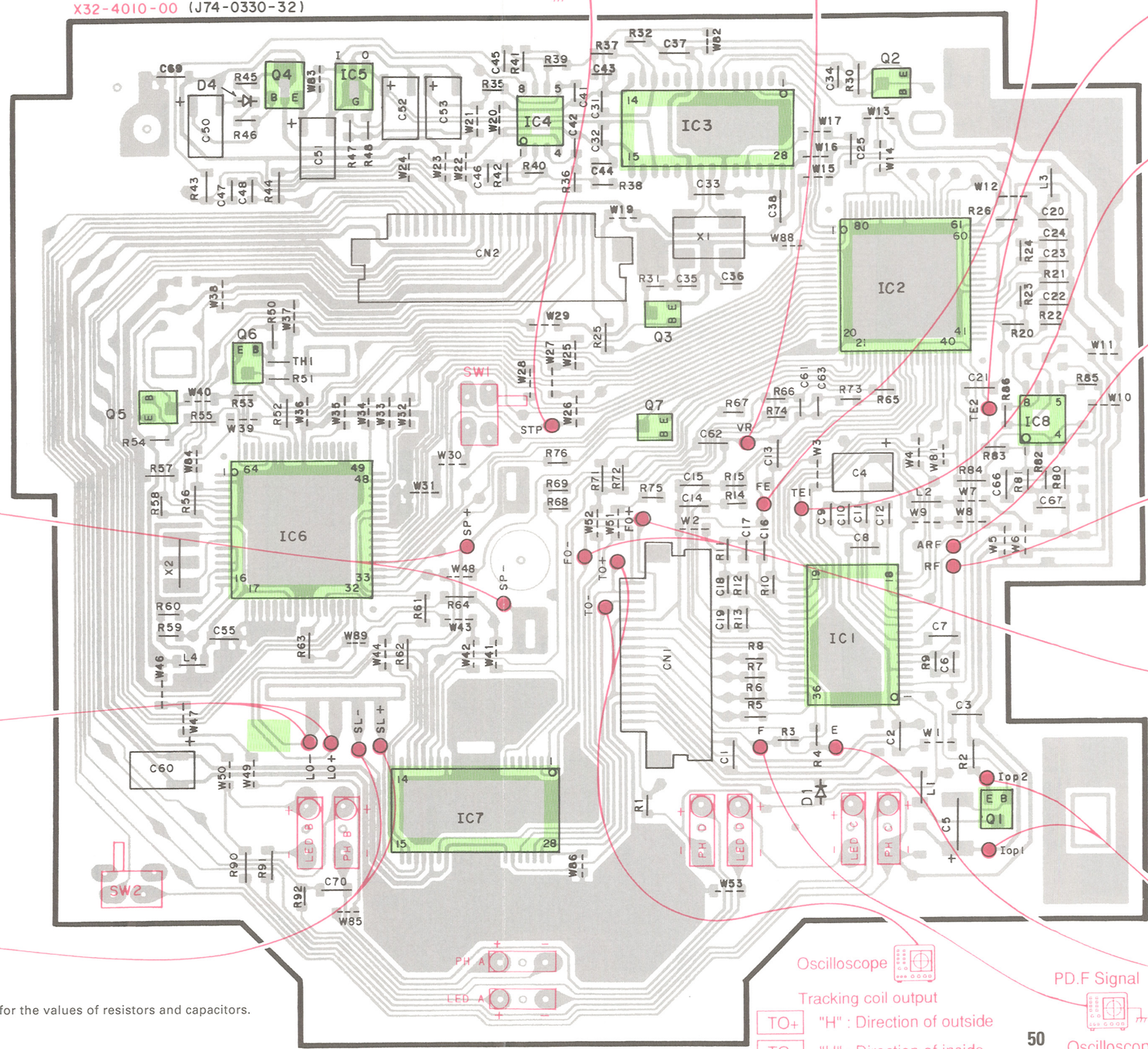

STP
Sled switch (S1)
"H" : Switch off
"L" : Switch on
DC voltmeter

VREF About 2.5V
DC voltmeter

FE
Focus error signal
Oscilloscope

TE2
Tracking error signal
(after low range boost up)
Oscilloscope

TE1
Tracking error signal
Oscilloscope

ARF
1.2Vp-p
RF signal (after AGC)
Oscilloscope

RF
0.8Vp-p
RF signal
Oscilloscope

Spindle motor output
SP+ "H" : Forward rotatin of disc
SP- "H" : Backward rotatin of disc
Oscilloscope

Loading motor output
LO+ "H" : Direction of eject
LO- "H" : Direction of loading
Oscilloscope

Sled motor output
SL+ "H" : Direction of outside
SL- "H" : Direction of inside
Oscilloscope

Focus coil output
FO+ "H" : Directipn of disc
FO- "H" : Direction away disc
Oscilloscope

Iop1 (+5V)
Iop2
Laser current measurement
Less than 0.5V : normal
DC voltmeter

PD.E Signal
Oscilloscope

PD.F Signal
Oscilloscope

Oscilloscope
Tracking coil output
TO+ "H" : Direction of outside
TO- "H" : Direction of inside

Refer to the schematic diagram for the values of resistors and capacitors.

PC BOARD (Foil side view)

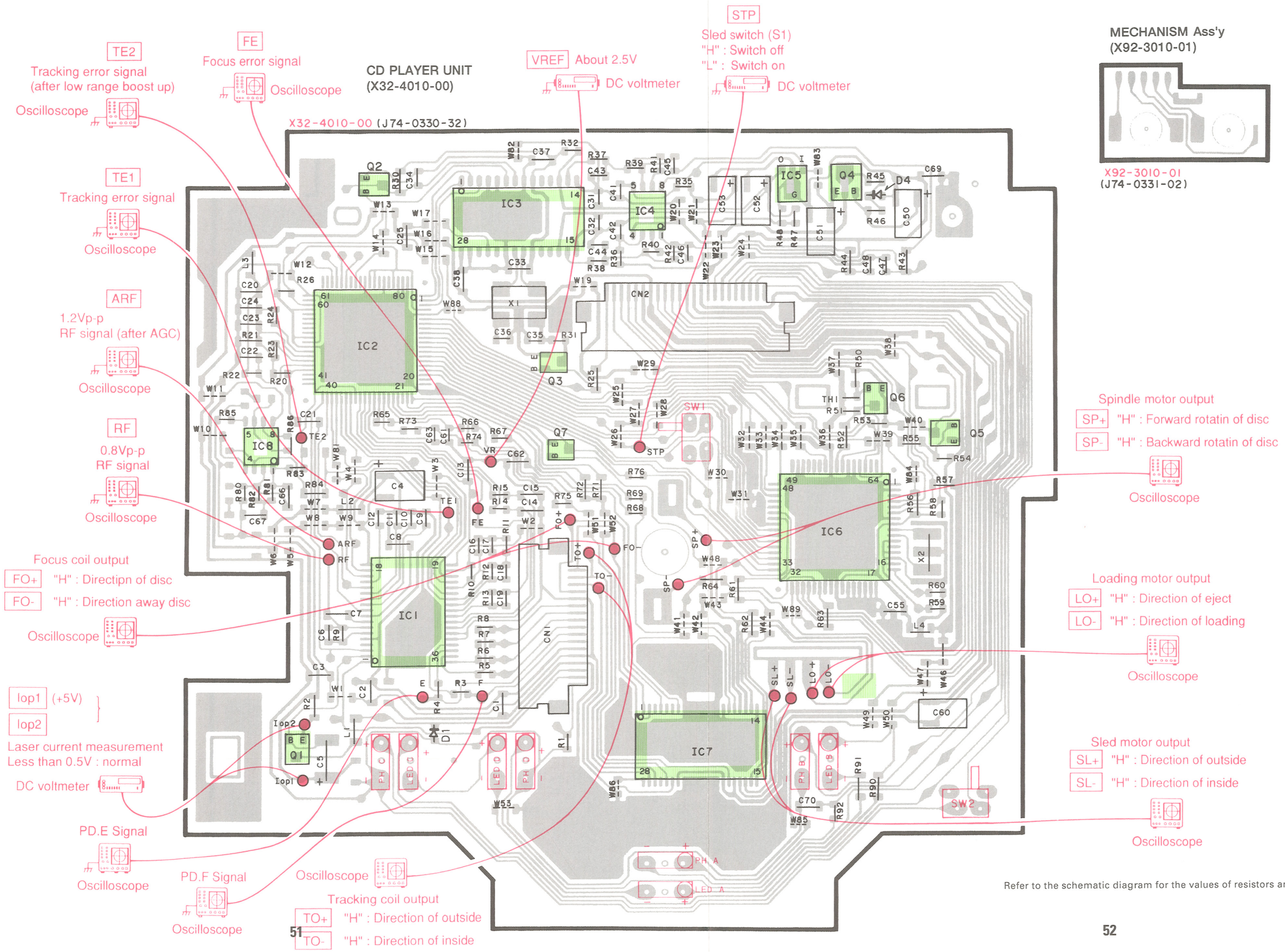

Refer to the schematic diagram for the values of resistors and capacitors.

(X13-8662-70)

IC7's pin description

IC8's pin description

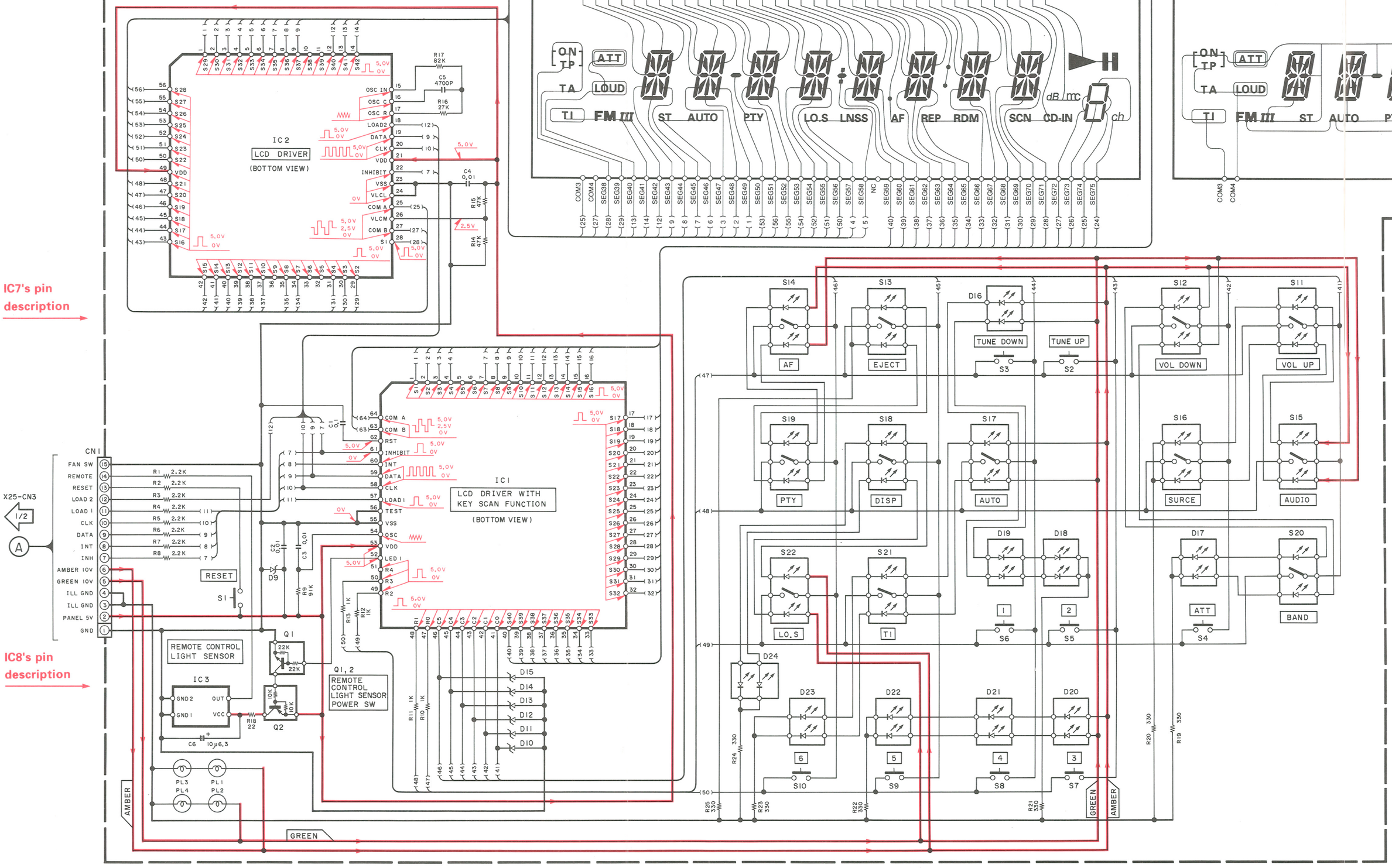

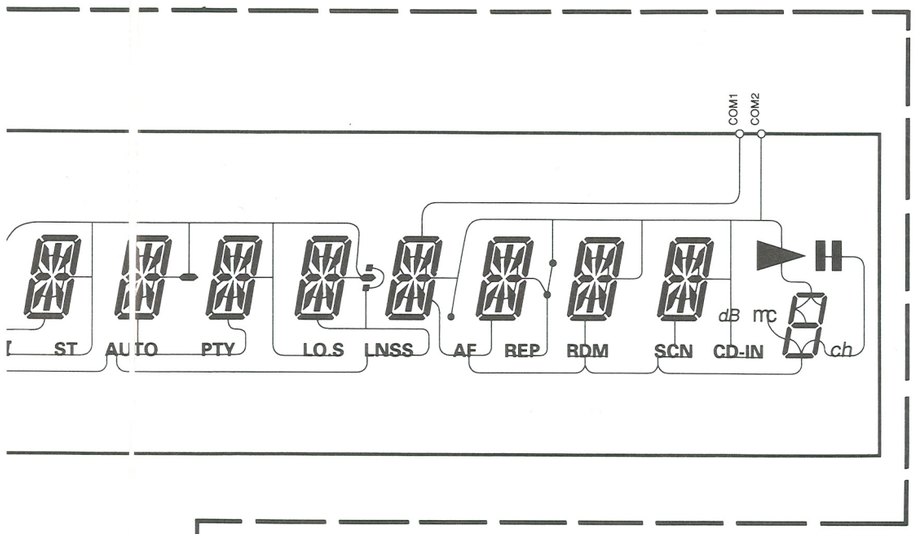

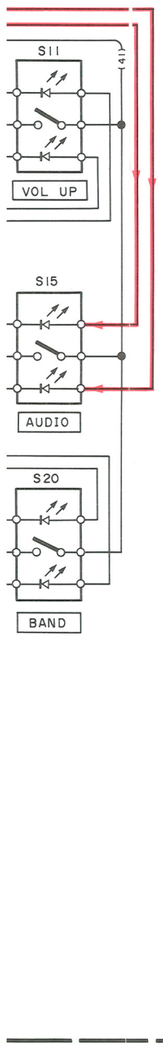

IC7's pin description

Pin.No.	Pin name	description	Logic L	Logic H
5	P ON	POWER ON 5V	ON	OFF
6	STBY	STBY POWER SUPPLY	ON	OFF
8	L INH	DISPLAY	DISPLAY ON	DISPLAY OFF
9	P CON	POWER CONTROL POWER SUPPLY	ON	OFF
10	FM	FM CIRCUIT POWER SUPPLY	OFF	ON
11	AM	AM CIRCUIT POWER SUPPLY	OFF	ON
12	ILL G	ILLMI GREEN	GREEN OFF	GREEN ON
13	ILL A	ILLMI AMBER	AMBER OFF	AMBER ON
14	DSI	DSI	DSI OFF	DSI ON
15	XSTP	X'TAL STOP	STOP	ON
16	MONO	FORCED MONO	Receive usually	FORCED MONO
18	MW/LW	AM BS CONTROL	LW	MW

IC8's pin description

pin	description
1	quality indication output
2	RDS data output
3	reference voltage output ($0.5V_{DDA}$)
4	multiplex signal input
5	+5V supply voltage for analog part
6	ground for analog part (0V)
7	subcarrier input to comparator
8	subcarrier output of reconstruction filter
9	oscillator mode / test control input
10	test enable input
11	ground for digital part (0V)
12	+5V supply voltage for digital part
13	oscillator input
14	oscillator output
15	57kHz clock signal output
16	RDS clock output

IC1 : MSM6606GS-VK
IC2 : MSM6544GS
IC3 : RS-21

Q1 : XDC124EK or DTC124EK
Q2 : DTA114EK

D9~15 : MA8056-M
D16~24 : B30-1349-05

GND LINE
+B LINE

KDC-8020R(K)(2/2)

2SB1326

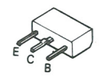

TC74HC02AF

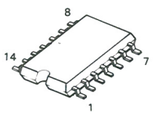

DTA114EK
DTA124EK
DTA144EK
DTC114TK
DTC124EK
DTC144EK
XDA124EK
XDC124EK
XDC144EK
2SA1037K
2SA1362
2SC2412K
2SD2114K

M5278D05

2SD1624

2SB1277

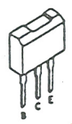

NJM4565MD

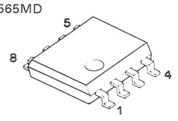

TA78L05F

2SK536

DC voltages are as measured with a high impedance voltmeter. Values may vary slightly due to variations between individual instruments or/and units.

CAUTION: For continued safety, replace safety critical components only with manufacturer's recommended parts (refer to parts list). ⚠ Indicates safety critical components. To reduce the risk of electric shock, leakage-current or resistance measurements shall be carried out (exposed parts are acceptably insulated from the supply circuit) before the appliance is returned to the customer.

Y22-5102-70

KDC-8020R
KENWOOD

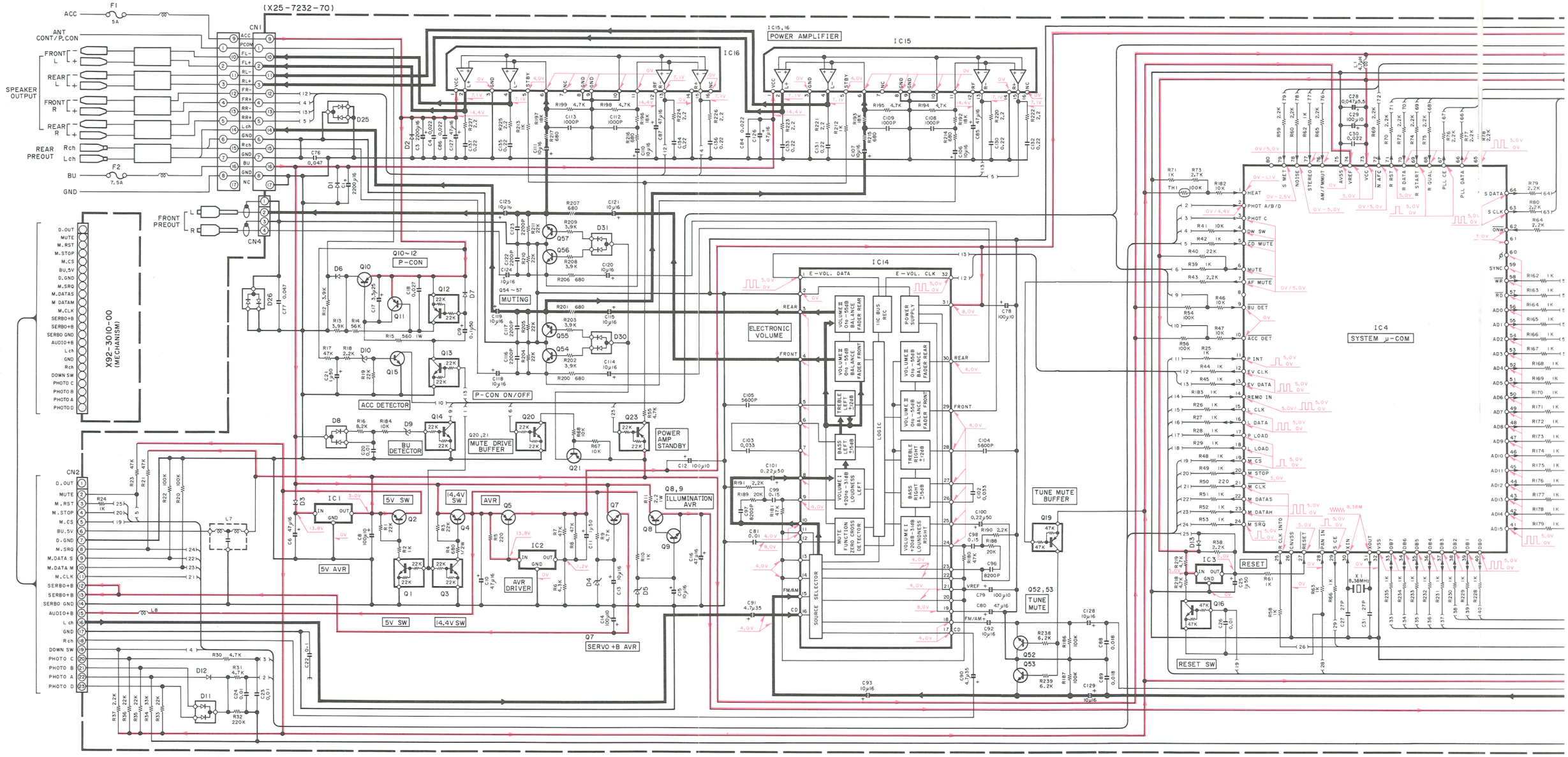

2SB1326

DTA114EK DTA124EK DTA144EK DTC114TK DTC124EK DTC144EK XDA124EK

XDC124EK XDC144EK 2SA1037K 2SA1362 2SC2412K 2SD2114K

2SD1624

2SB1277

NJM4565MD

TA78L05F

2SK536

TC74HC02AF

M5278D05

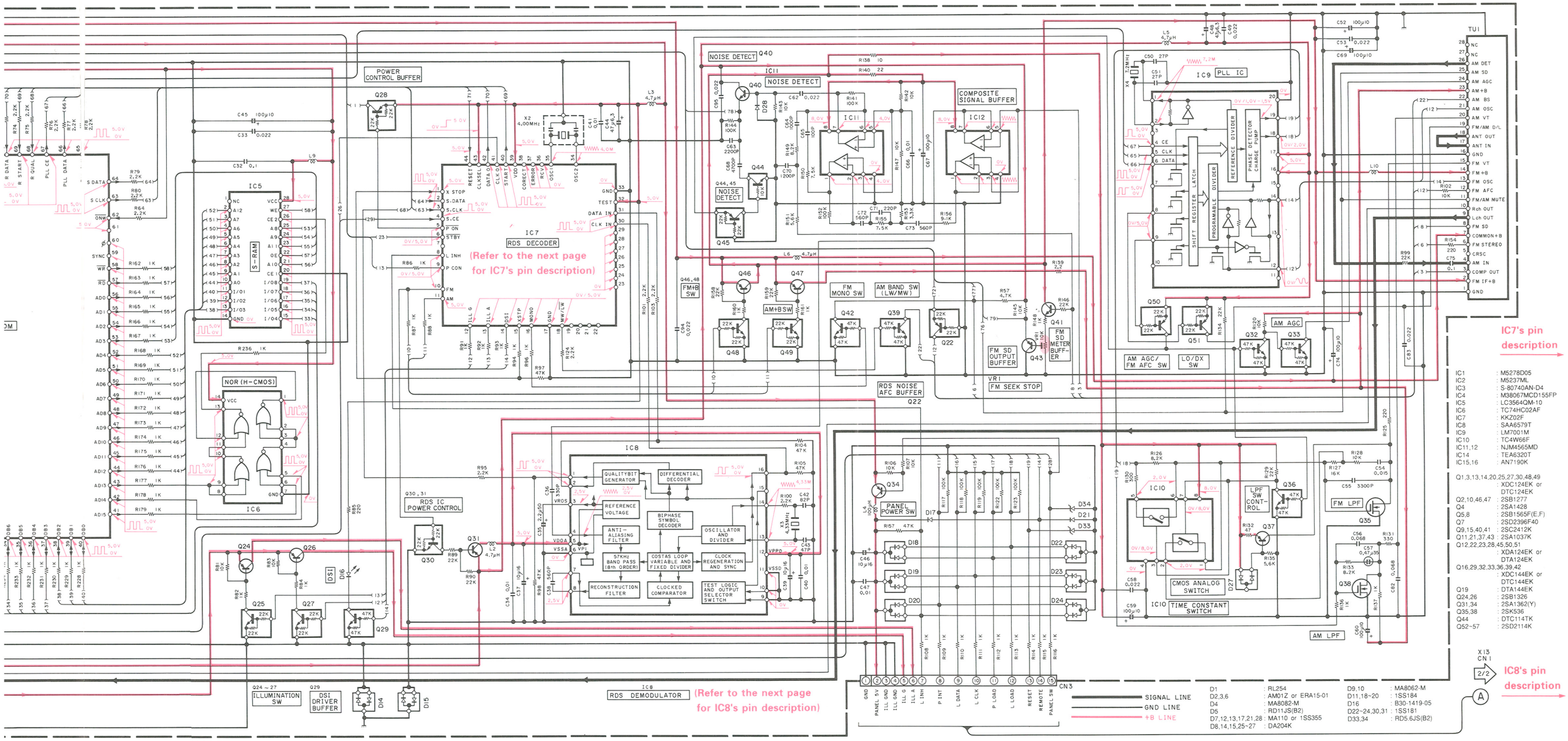

IC7's pin description

IC1	: M5278D05
IC2	: M5237ML
IC3	: S-80740AN-D4
IC4	: M38067MCD155FP
IC5	: LC3564QM-10
IC6	: TC74HC02AF
IC7	: KK202F
IC8	: SAA6579T
IC9	: LM7001M
IC10	: TC4W66F
IC11,12	: NJM4565MD
IC14	: TEA6320T
IC15,16	: AN7190K
Q1,3,13,14,20,25,27,30,48,49	: XDC124EK or DTC124EK
Q2,10,46,47	: 2SB1277
Q4	: 2SA1428
Q5,8	: 2SB1565F(E,F)
Q7	: 2SD2396F40
Q9,15,40,41	: 2SC2412K
Q11,21,37,43	: 2SA1037K
Q12,22,23,28,45,50,51	: XDA124EK or DTA124EK
Q16,29,32,33,36,39,42	: XDC144EK or DTC144EK
Q19	: DTA144EK
Q24,26	: 2SB1326
Q31,34	: 2SA1362(Y)
Q35,38	: 2SK536
Q44	: DTC114TK
Q52~57	: 2SD2114K

IC8's pin description

D1	: RL254	D9,10	: MA8062-M
D2,3,6	: AM01Z or ERA15-01	D11,18~20	: 1SS184
D4	: MA8082-M	D16	: B30-1419-05
D5	: RD11JS(B2)	D22~24,30,31	: 1SS181
D7,12,13,17,21,28	: MA110 or 1SS355	D33,34	: RD5.6JS(B2)
D8,14,15,25~27	: DA204K		

KDC-8020R(K)(1/2)

DC voltages are as measured with a high impedance voltmeter. Values may vary slightly due to variations between individual instruments or/and units.

CAUTION: For continued safety, replace safety critical components only with manufacturer's recommended parts (refer to parts list). ⚠ Indicates safety critical components. To reduce the risk of electric shock, leakage-current or resistance measurements shall be carried out (exposed parts are acceptably insulated from the supply circuit) before the appliance is returned to the customer.

Y22-5102-70

KDC-8020R

KENWOOD

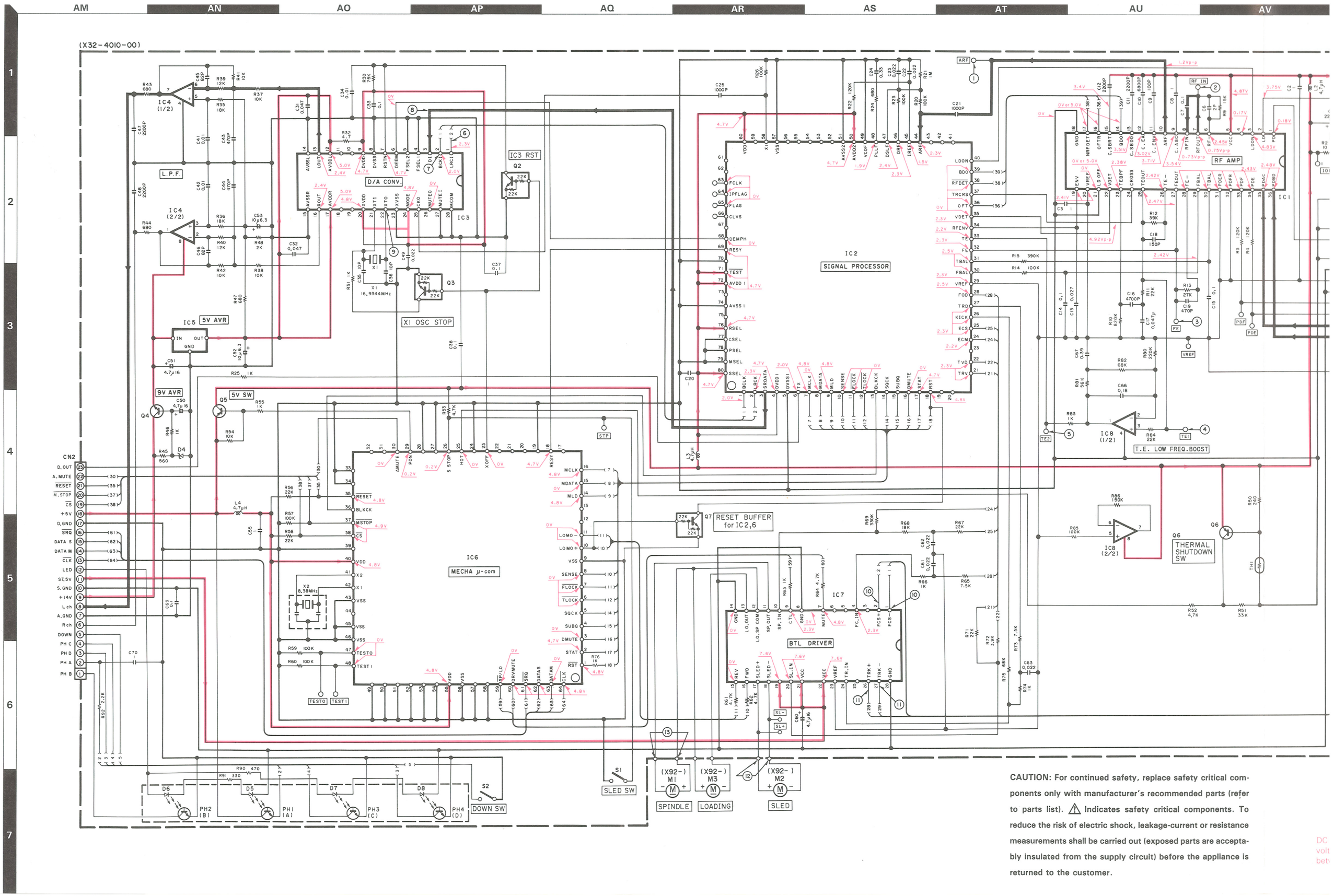

CAUTION: For continued safety, replace safety critical components only with manufacturer's recommended parts (refer to parts list). ⚠ Indicates safety critical components. To reduce the risk of electric shock, leakage-current or resistance measurements shall be carried out (exposed parts are acceptably insulated from the supply circuit) before the appliance is returned to the customer.

IC2
SIGNAL PROCESSOR

RF AMP

IC1

AUTOMATIC POWER CONT.

(X92-) PU1

PDIC

FOCUS COIL

TRACK COIL

IC7
BTL DRIVER

IC8 (1/2)
T.E. LOW FREQ.BOOST

IC8 (2/2)

Q6
THERMAL SHUTDOWN SW

Q7 RESET BUFFER for IC2,6

(X92-) M1
SPINDLE

(X92-) M3
LOADING

(X92-) M2
SLED

SLED SW

SIGNAL LINE
GND LINE
+B LINE

IC1 : AN8806SB
IC2 : MN662720RB
IC3 : SM5873BS or MP5873BS
IC4,8 : NJM4565MD
IC5 : TA78L05F
IC6 : 78002BGC603-AB8
IC7 : BA6795FP

Q1,5 : 2SA1362
Q2,3,7 : DTC124EK or XDC124EK
Q4 : 2SD1624
Q6 : 2SA1037K

D1 : MA110 or ISS355
D4 : MA8091
D5~8 : B30-1426-05

PH1~4 : PT461T

TH1 : NTH5G40B333K01

2SB1326

DTA114EK
DTA124EK
DTA144EK
DTC114TK
DTC124EK
DTC144EK
XDA124EK
XDC124EK
XDC144EK
2SA1037K
2SA1362
2SC2412K
2SD2114K

2SD1624

2SB1277

NJM4565MD

TA78L05F

2SK536

TC74HC02AF

M5278D05

CAUTION: For continued safety, replace safety critical components only with manufacturer's recommended parts (refer to parts list). ⚠ Indicates safety critical components. To reduce the risk of electric shock, leakage-current or resistance measurements shall be carried out (exposed parts are acceptably insulated from the supply circuit) before the appliance is returned to the customer.

DC voltages are as measured with a high impedance voltmeter. Values may vary slightly due to variations between individual instruments or/and units.

KDC-8020R (K)

Y22-5102-70

KDC-8020R

KENWOOD

(X25-) TUI

IC1 : LA1175
IC2 : LA1135M
IC3 : KKC03

TR201,203 : DTA124EK
TR202,301 : DTC124EK
TR204,302,303 : 2SC2412 K
TR205 : 2SC2413K

D2 : MA153
D3~6,201,301 : MA110

CAUTION: For continued safety, replace safety critical components only with manufacturer's recommended parts (refer to parts list). ⚠ Indicates safety critical components. To reduce the risk of electric shock, leakage-current or resistance measurements shall be carried out (exposed parts are acceptably insulated from the supply circuit) before the appliance is returned to the customer.

DC voltages are as measured with a high voltmeter. Values may vary slightly due t between individual instruments or/and units.

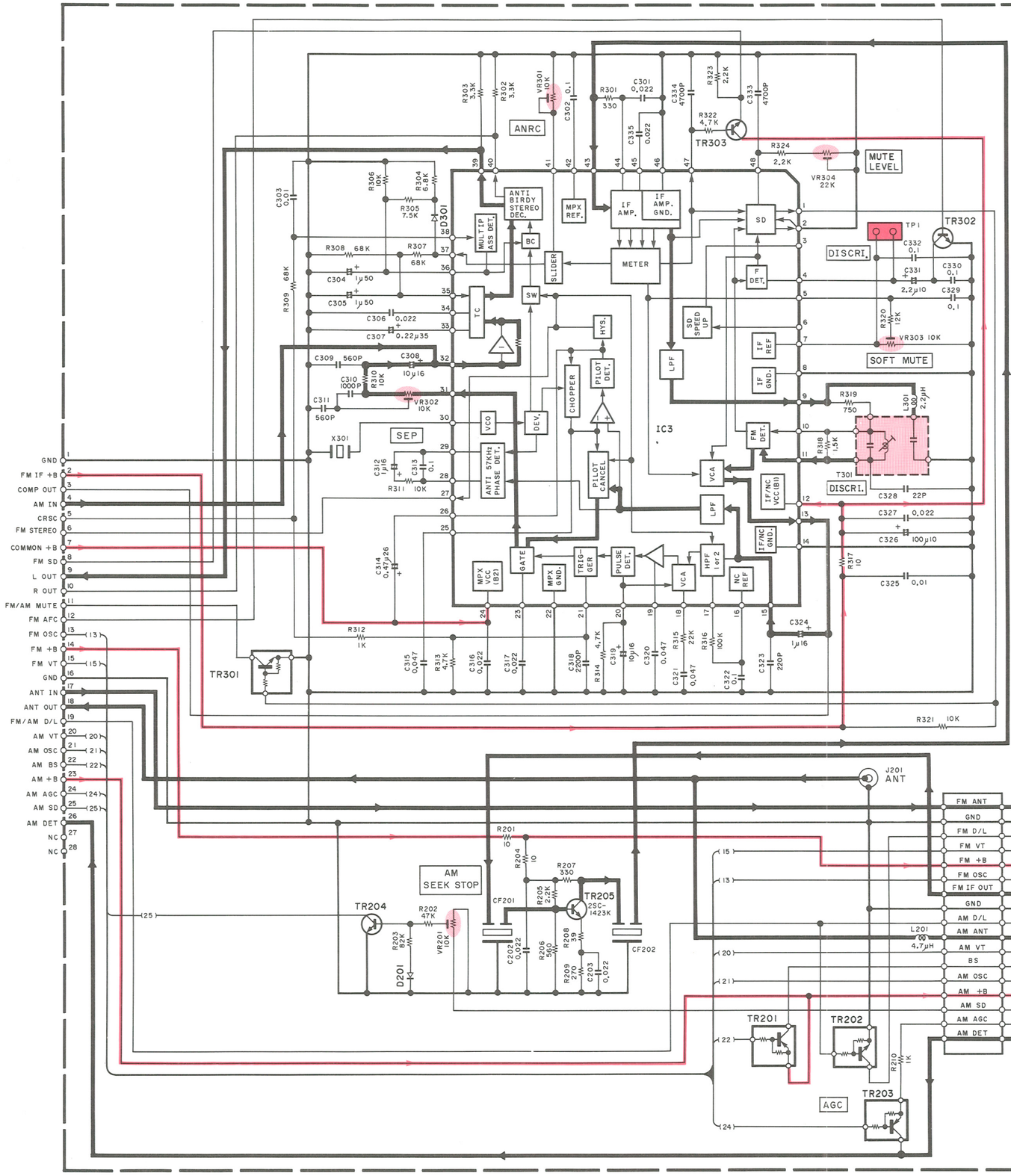

IC1 : LA1175
IC2 : LA1135M
IC3 : KKC03

TR201,203 : DTA124EK
TR202,301 : DTC124EK
TR204,302,303 : 2SC2412 K
TR205 : 2SC2413K

D2 : MA153
D3~6,201,301 : MA110

CAUTION: For continued safety, replace safety critical components only with manufacturer's recommended parts (refer to parts list). ⚠ Indicates safety critical components. To reduce the risk of electric shock, leakage-current or resistance measurements shall be carried out (exposed parts are acceptably insulated from the supply circuit) before the appliance is returned to the customer.

DC voltages are as measured with a high impedance voltmeter. Values may vary slightly due to variations between individual instruments or/and units.

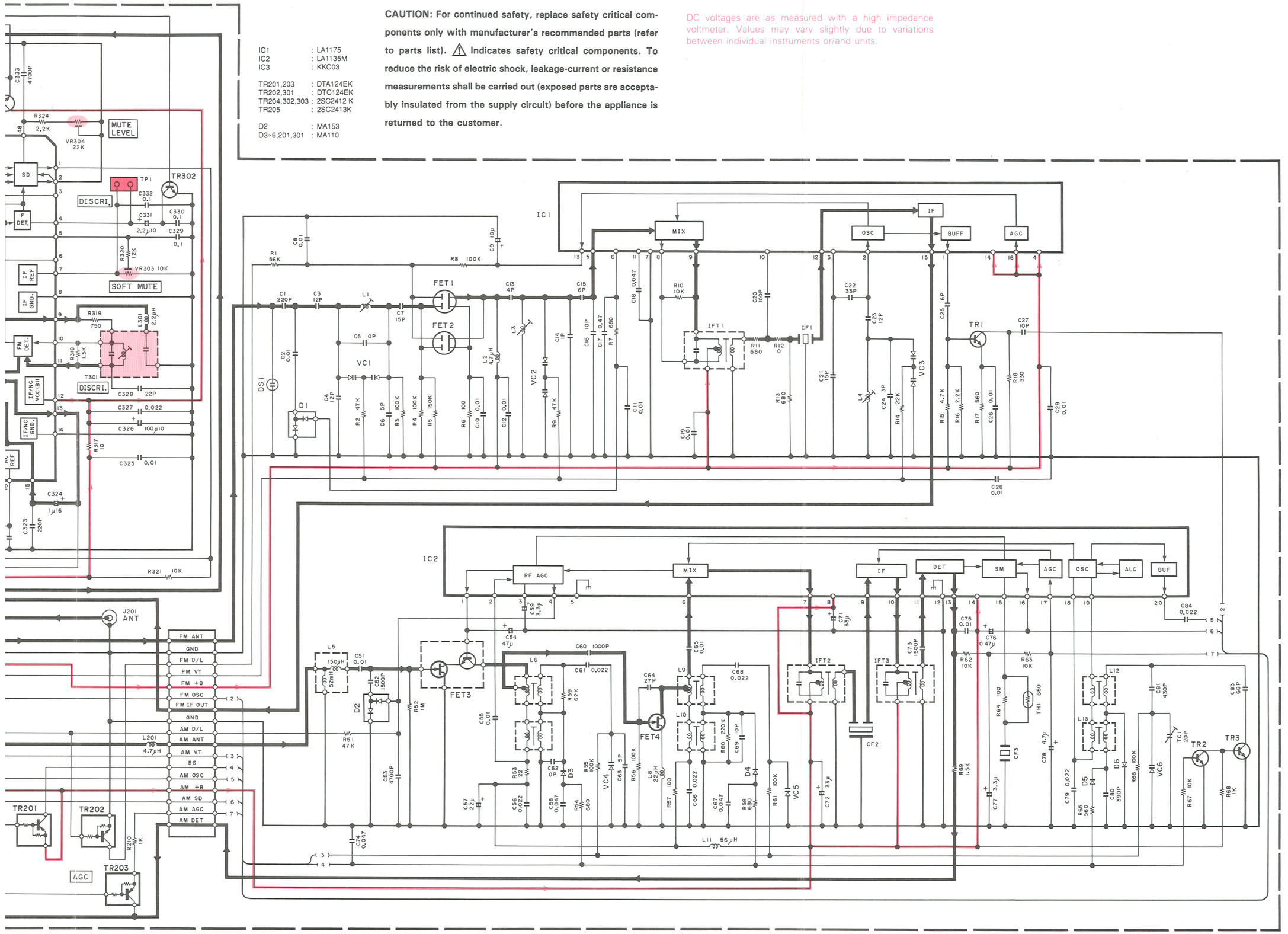

KDC-8020R(K) TUI

2SB1326

DTA114EK
DTA124EK
DTA144EK
DTC114TK
DTC124EK
DTC144EK
XDA124EK
XDC124EK
XDC144EK
2SA1037K
2SA1362
2SC2412K
2SD2114K

2SD1624

2SB1277

NJM4565MD

TA78L05F
VREF
GND
VIN

2SK536

TC74HC02AF

LM7001M

KDC-8020R
KENWOOD

ADJUSTMENT (MECHANISM)

Wave form: Photo No. → Refer to SCHEMATIC DIAGRAM (X32-4010-00)

① ARF
200mV/cm 5µs

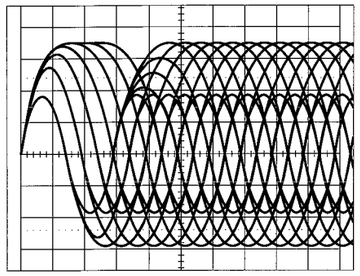

② RF
200mV/cm 5µs

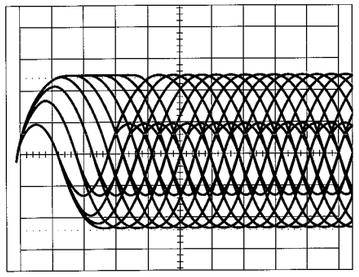

③ FE
500mV/cm 1ms

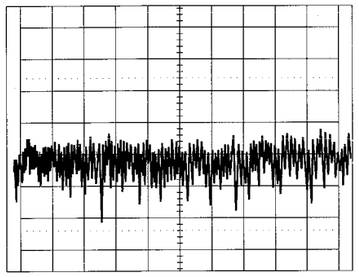

④ TE1
100mV/cm 1ms

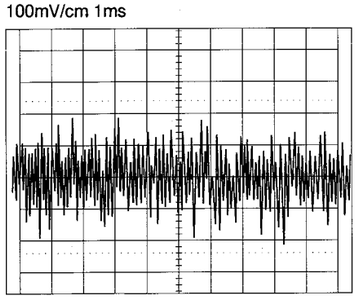

⑤ TE2
100mV/cm 1ms

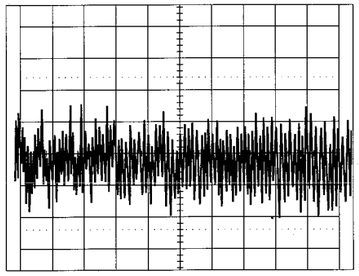

⑥ LRC IN(IC3 Pin No.1)
1V/cm 5µs

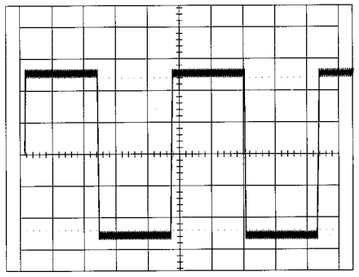

⑦ BCK IN(IC3 Pin No.2)
1V/cm 2µs

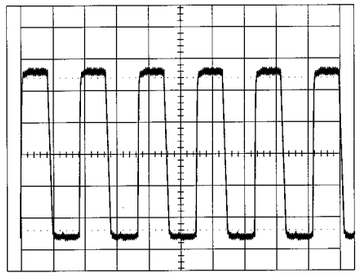

⑧ DATA IN(IC3 Pin No.3)
1V/cm 2µs

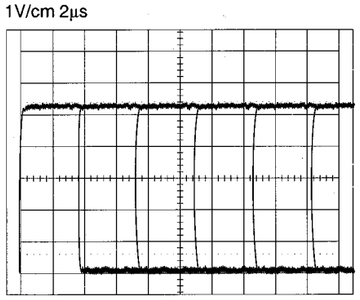

⑨ XTO (IC3 Pin No.22)
1V/cm 50µs

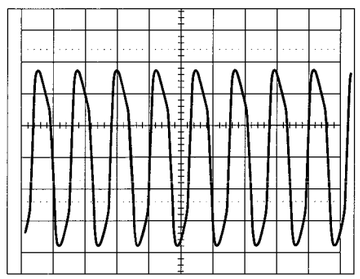

⑩ FO (IC7 Pin No.1 or 2)
200mV/cm 1ms

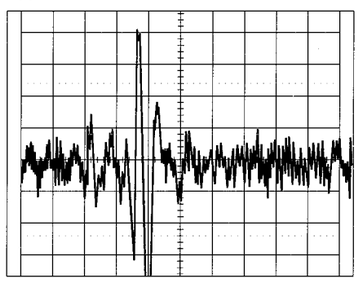

⑪ TO (IC7 Pin No.26 or 27)
500mV/cm 1ms

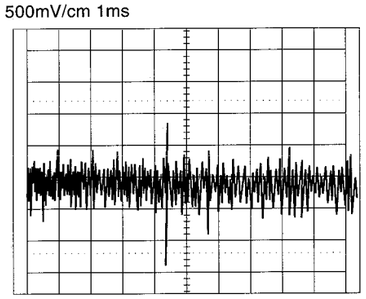

⑫ SL M.(SLED M. + and -)
200mV/cm 50ms

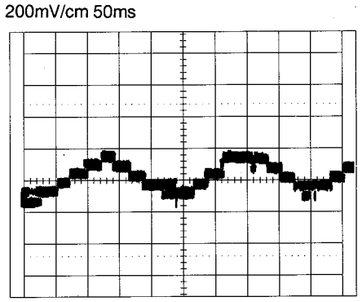

⑬ SPDL M. (SPDL M. + and -)
200mV/cm 10ms

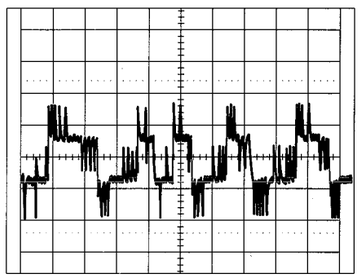

EXPLODED VIEW (MECHANISM)

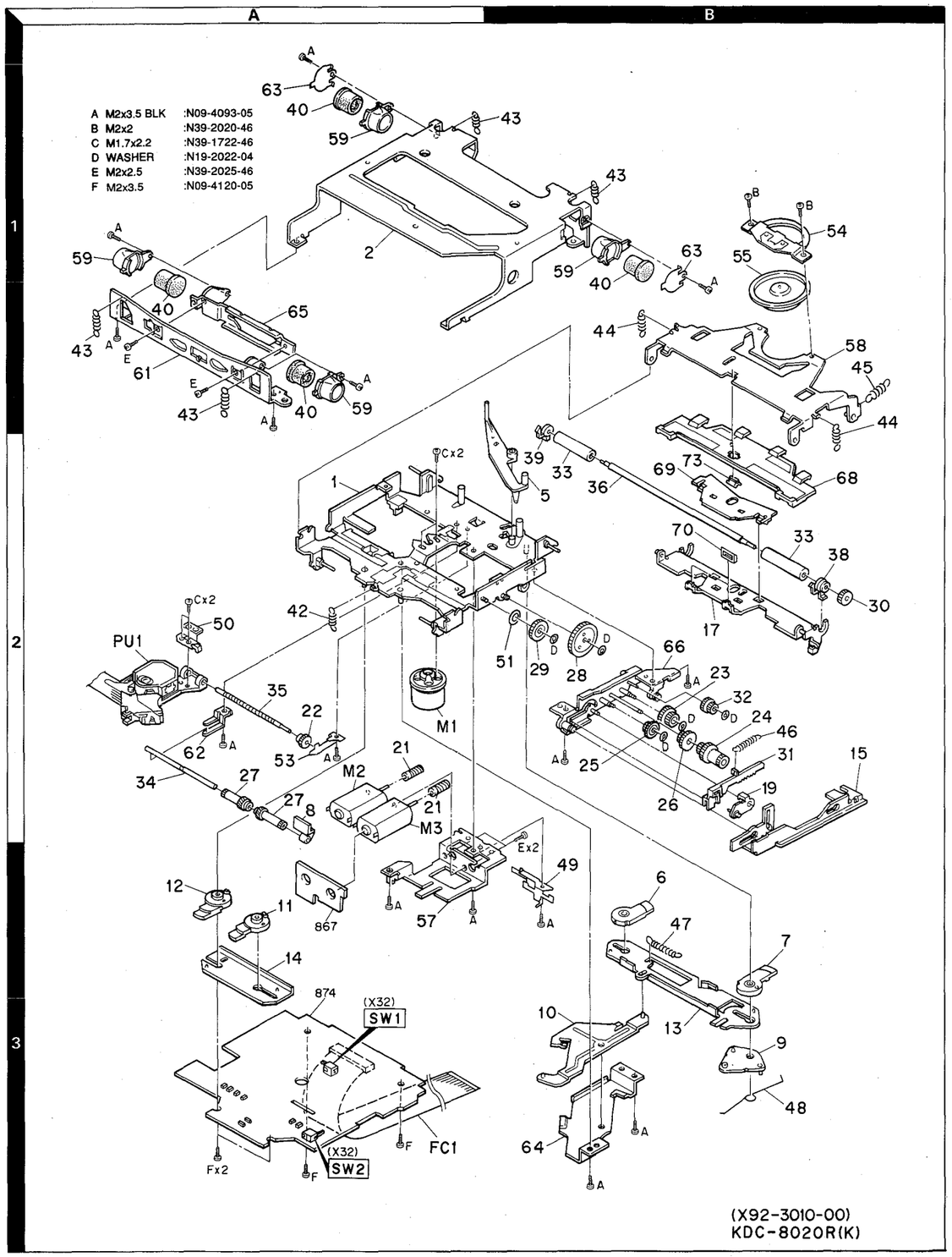

Parts with the exploded numbers larger than 700 are not supplied.

KDC-8020R

EXPLODED VIEW (UNIT)

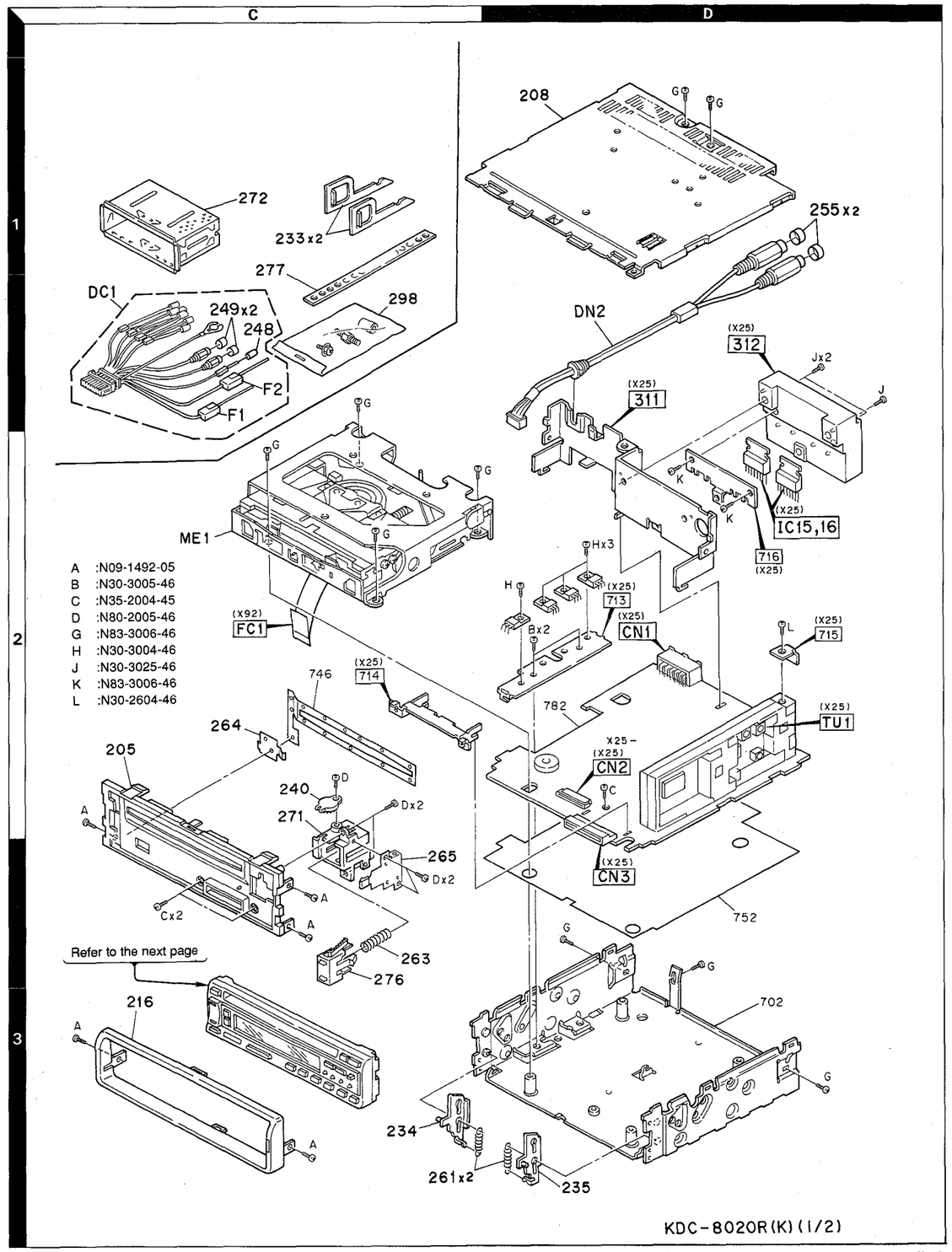

Parts with the exploded numbers larger than 700 are not supplied.

EXPLODED VIEW (PANEL)

E :N80-2006-46
F :N80-2008-45
M :N80-2010-45

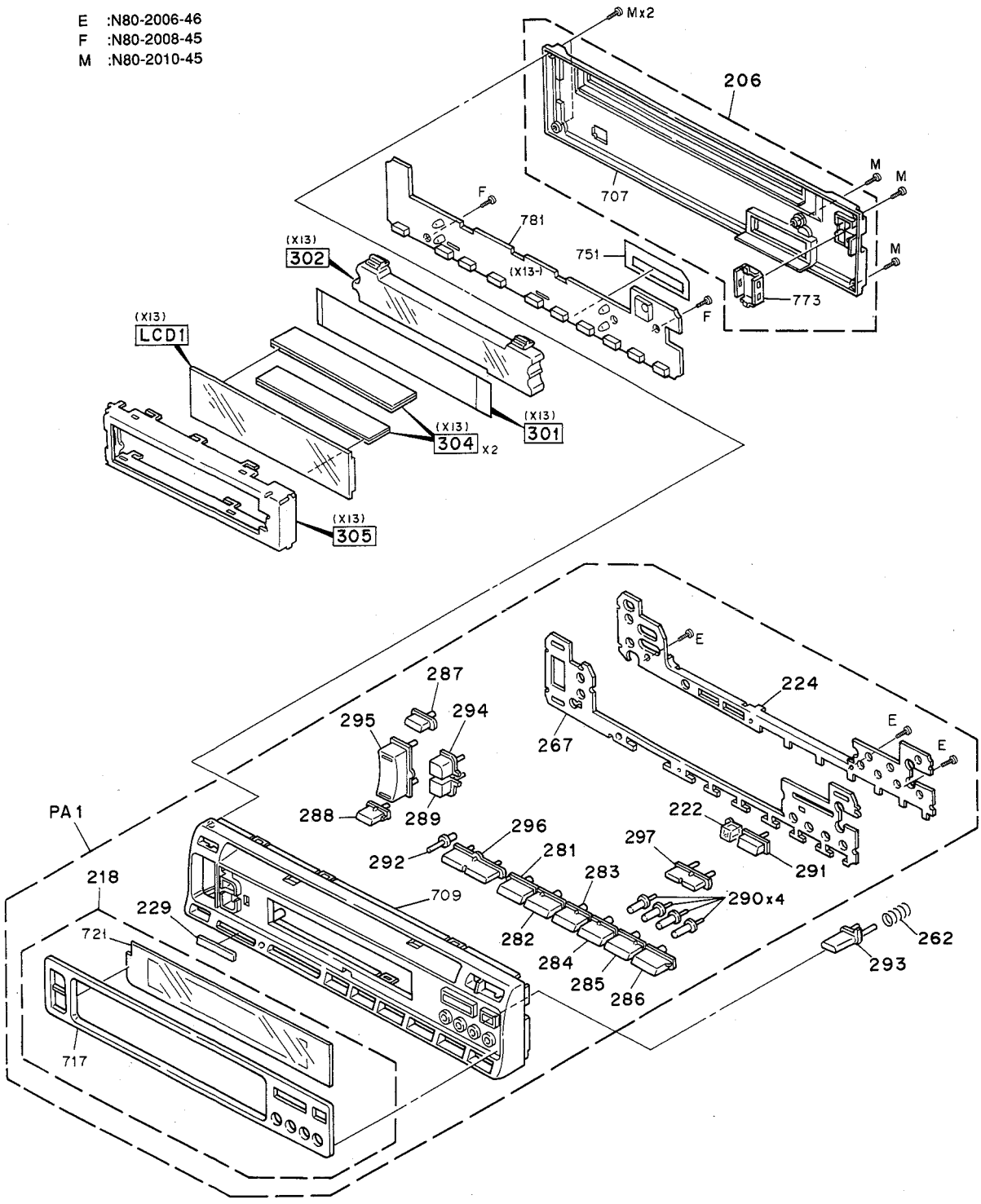

KDC-8020R (K) (2/2)

Parts with the exploded numbers larger than 700 are not supplied.

KDC-8020R

PARTS LIST

× New Parts
Parts without Parts No. are not supplied.
Les articles non mentionnes dans le Parts No. ne sont pas fournis.
Teile ohne Parts No. werden nicht geliefert.

Ref. No. 参照番号	Address 位置	New Parts 新	Parts No. 部品番号	Description 部品名／規格	Destination 仕向	Remarks 備考
KDC-8020R						
205	2C	*	A22-1234-31	SUB PANEL		
206	1F	*	A46-1225-43	REAR COVER ASSY		
208	1D	*	A52-0674-22	TOP COVER		
PA1	3E	*	A64-0348-22	PANEL ASSY		
216	3C		B07-2041-01	ESCUTCHEON		
218	3E	*	B07-2051-23	ESCUTCHEON ASSY (on PANEL)		
222	3F		B10-1586-04	FRONT GLASS (for REMOTE CONTR.		
224	2F		B19-0986-03	LIGHTING BOARD		
229	3E		B43-1210-04	KENWOOD BADGE		
-			B46-0100-30	WARRANTY CARD		
-			B46-0182-14	ID CARD		
-		*	B64-0408-00	INST. MANUAL (ENGLISH, FRENCH)		
-		*	B64-0409-00	INST. MANUAL (GERMAN, NETHER.)		
-		*	B64-0410-00	INST. MANUAL (ITALIAN, SPANISH		
233	1C		D10-2834-04	LEVER (REMOVAL TOOL)		
234	3C		D10-2839-04	LEVER ASSY (left side of chass		
235	3D		D10-2840-04	LEVER ASSY (right side of chas		
240	2C		D39-0211-05	DAMPER		
DC1	1C		E30-4150-05	DC CORD ASSY		
DN2	1D	*	E30-4172-05	CORD WITH PLUG		
248	1C		F29-0604-15	CAP (for ANT.CONT.CORD)		
249	1C		F29-0049-05	CAP (for REAR PRE-OUT CORDs)		
255	1D		F29-0049-05	CAP (for FRONT PRE-OUT CORDs)		
F1	1C		F06-5024-05	FUSE (5A) (for ACC)		
F2	1C		F05-7521-05	FUSE (7.5A) (for B.U.)		
261	3C		G01-2691-04	EXTENSION SPRING		
262	3F		G01-2692-14	COMPRESSION SPRING		
263	3C		G01-2694-04	COMPRESSION SPRING		
264	2C		G02-1161-04	SPRING		
265	3C		G02-1181-23	FLAT SPRING		
267	2F	*	G11-1642-03	CUSHION (for PANEL ASSY)		
-		*	H10-4439-12	POLYSTYRENE FOAMED FIXTURE		
-			H25-0329-04	PROTECTION BAG (280X450X0.03)		
-			H25-0337-04	PROTECTION BAG (180X300X0.03)		
-		*	H54-0230-04	ITEM CARTON CASE		
-		*	H64-0253-04	OUTER CARTON CASE		
271	2C	*	J19-4548-02	HOLDER		
272	1C		J21-7473-01	MOUNTING HARDWARE (M.SLEEVE)		
276	3C		J52-0037-14	MAGNET CATCH		
277	1C		J54-0059-04	STAY		
281	3F	*	K24-1532-04	KNOB (1)		
282	3F	*	K24-1533-04	KNOB (2)		
283	3F	*	K24-1534-04	KNOB (3)		
284	3F	*	K24-1535-04	KNOB (4)		
285	3F		K24-1504-04	KNOB (5)		
286	3F	*	K24-1537-04	KNOB (6)		
287	2E		K24-1496-04	KNOB (AUD)		
288	3E		K24-1497-04	KNOB (ATT)		
289	3E	*	K24-1531-04	KNOB (BND)		
290	3F		K24-1506-04	KNOB (AUTO/TPS, TI, LO.S, DISP		
291	3F		K24-1507-04	KNOB (EJECT)		

L:Scandinavia **K:**USA **P:**Canada **R:**Mexico
Y:PX(Far East, Hawaii) **T:**England **E:**Europe **G:**Germany
Y:AAFES(Europe) **X:**Australia **M:**Other Areas

⚠ indicates safety critical components.

PARTS LIST

× New Parts
Parts without Parts No. are not supplied.
Les articles non mentionnes dans le Parts No. ne sont pas fournis.
Teile ohne Parts No. werden nicht geliefert.

Ref. No. 参照番号	Address 位置	New Parts 新	Parts No. 部品番号	Description 部品名／規格	Destination 仕向	Remarks 備考
292	3E		K24-1508-04	KNØB (RESET)		
293	3F		K24-1509-24	KNØB (RELEASE)		
294	2E		K24-1519-04	KNØB (SRC)		
295	2E		K25-0620-04	KNØB (AUDIØ CØNTRØL)		
296	3F	*	K25-0655-04	KNØB (TUNE/TRACK)		
297	3F	*	K25-0654-04	KNØB (AF/PTY)		
298	1C	*	N99-1615-05	SCREW SET		
A	2C,3C		N09-1492-05	MACHINE SCREW (2.6X3.5,ナベ)		
B	2D		N30-3005-46	PAN HEAD MACHINE SCREW		
C	2D,3C		N35-2004-45	BINDING HEAD MACHINE SCREW		
D	2C,3C		N80-2005-46	PAN HEAD TAPTITE SCREW		
E	2F		N80-2006-46	PAN HEAD TAPTITE SCREW (PANEL)		
F	1E,1F		N80-2008-46	PAN HEAD TAPTITE SCREW		
G	1D,2C		N83-3006-46	PAN HEAD TAPTITE SCREW		
M	1F		N80-2010-45	PAN HEAD TAPTITE SCREW		
ME1	2C		X92-3010-00	MECHANISM ASSY		
SWITCH UNIT (X13-8662-70)						
301	2F		B11-0875-04	ØPTICAL DIFFUSER		
302	1E		B19-0987-03	LIGHTING BØARD		
D16 -24			B30-1349-05	LED		
LCD1	2E	*	B38-0613-05	LIQUID CRYSTAL		
PL1			B30-1305-05	LAMP (5.5V .125A)		
PL2			B30-1306-05	LAMP (5.5V .125A)		
PL3			B30-1305-05	LAMP (5.5V .125A)		
PL4			B30-1306-05	LAMP (5.5V .125A)		
C1			CK73EB1H104K	CHIP C 0.10UF K		
C2 -4			CK73FB1H103K	CHIP C 0.010UF K		
C5			CK73FB1H472K	CHIP C 4700PF K		
C6			C92-0509-05	CHIP TAN 10UF 6.3WV		
304	2E		E29-1440-04	CØNDUCTIVE RUBBER		
CN1			E59-0815-05	RECTANGULAR PLUG		
305	2E	*	J19-4549-03	HØLDER		
R1 -8			RK73FB2A222J	CHIP R 2.2K J 1/10W		
R9			RK73FB2A913J	CHIP R 91K J 1/10W		
R10 -13			RK73FB2A102J	CHIP R 1.0K J 1/10W		
R14 ,15			RK73FB2A473J	CHIP R 47K J 1/10W		
R16			RK73FB2A273J	CHIP R 27K J 1/10W		
R17			RK73FB2A823J	CHIP R 82K J 1/10W		
R18			RK73EB2B220J	CHIP R 22 J 1/8W		
R19 -25			RK73EB2B331J	CHIP R 330 J 1/8W		
S1 -10			S70-0815-05	TACT SWITCH		
S11 -22			S40-1606-05	PUSH SWITCH		
D9 -15			MA8056-M	ZENER DIØDE		
IC1			MSM6606GS-VK	IC		
IC2			MSM6544GS	ANALØGUE IC		
IC3			RS-21	IC(RIMØCØN SENSØR)		
Q1			DTC124EK	DIGITAL TRANSISTØR		
Q1			XDC124EK	DIGITAL TRANSISTØR		
Q2			DTA114EK	DIGITAL TRANSISTØR		

L:Scandinavia K:USA P:Canada R:Mexico
Y:PX(Far East, Hawaii) T:England E:Europe G:Germany
Y:AAFES(Europe) X:Australia M:Other Areas

⚠ indicates safety critical components.

KDC-8020R

PARTS LIST

× New Parts
Parts without Parts No. are not supplied.
Les articles non mentionnes dans le Parts No. ne sont pas fournis.
Teile ohne Parts No. werden nicht geliefert.

Ref. No. 参照番号	Address 位置	New Parts 新	Parts No. 部品番号	Description 部品名／規格	Destination 仕向	Remarks 備考
ELECTRIC UNIT (X25-7232-70)						
311	1D	*	A84-0047-03	REAR PANEL		
D16			B30-1419-05	LED (for DSI)		
C1			C90-2765-05	ELECTRO 2200UF 16WV		
C3			C90-2765-05	ELECTRO 2200UF 16WV		
C4			CK73FB1H223KTA	CHIP C 0.022UF K		
C6			CE04CW1C470M	ELECTRO 47UF 16WV		
C8			CE04CW1A101M	ELECTRO 100UF 10WV		
C10			CE04CW1C470M	ELECTRO 47UF 16WV		
C11			CE04CW1H010M	ELECTRO 1.0UF 50WV		
C12			CE04CW1A101M	ELECTRO 100UF 10WV		
C13			CE04CW1C100M	ELECTRO 10UF 16WV		
C14			CE04CW1A101M	ELECTRO 100UF 10WV		
C15			CE04CW1C100M	ELECTRO 10UF 16WV		
C16			CE04CW1C470M	ELECTRO 47UF 16WV		
C17			CE04CW1E3R3M	ELECTRO 3.3UF 25WV		
C18			CK73EB1H273K	CHIP C 0.027UF K		
C19			CE04CW1H0R1M	ELECTRO 0.1UF 50WV		
C20			CK73FB1H103K	CHIP C 0.010UF K		
C21			CE04CW1H010M	ELECTRO 1.0UF 50WV		
C22			CK73EB1H104K	CHIP C 0.10UF K		
C23 ,24			CK73FB1H103K	CHIP C 0.010UF K		
C25			CE04CW1H010M	ELECTRO 1.0UF 50WV		
C26			CK73FB1H103K	CHIP C 0.010UF K		
C27			CC73FCH1H270J	CHIP C 27PF J		
C28			C90-1827-05	ELECTRO 0.047UF 5.5WV		
C29			CE04CW1A101M	ELECTRO 100UF 10WV		
C30			CK73FB1H223KTA	CHIP C 0.022UF K		
C31			CC73FCH1H270J	CHIP C 27PF J		
C32			CK73EB1H104K	CHIP C 0.10UF K		
C33			CK73EB1H223K	CHIP C 0.022UF K		
C34			CK73FB1H103K	CHIP C 0.010UF K		
C35			CE04CW1H2R2M	ELECTRO 2.2UF 50WV		
C36			CK73FB1H331K	CHIP C 330PF K		
C37			CE04CW1C100M	ELECTRO 10UF 16WV		
C38			CK73FB1H561K	CHIP C 560PF K		
C39			CE04CW1C100M	ELECTRO 10UF 16WV		
C40 ,41			CK73FB1H103K	CHIP C 0.010UF K		
C42			CC73FCH1H820J	CHIP C 82PF J		
C43			CC73FCH1H470J	CHIP C 47PF J		
C44			CE04CW0J470M	ELECTRO 47UF 6.3WV		
C45			CE04CW1A101M	ELECTRO 100UF 10WV		
C46			CE04CW1C100M	ELECTRO 10UF 16WV		
C47			CK73FB1H103K	CHIP C 0.010UF K		
C48			CE04CW0J470M	ELECTRO 47UF 6.3WV		
C49			CK73FB1H223KTA	CHIP C 0.022UF K		
C50 ,51			CC73FCH1H270J	CHIP C 27PF J		
C52			CE04CW1A101M	ELECTRO 100UF 10WV		
C53			CK73EB1H223K	CHIP C 0.022UF K		
C54		*	C93-1055-05	CERAMIC 0.015UF K		
C55			C93-1035-05	CERAMIC 3300PF K		
C56			CK73EB1H683K	CHIP C 0.068UF K		
C57			C90-2807-05	NP-ELECT 0.47UF 35WV		

L:Scandinavia K:USA P:Canada R:Mexico
Y:PX(Far East, Hawaii) T:England E:Europe G:Germany
Y:AAFES(Europe) X:Australia M:Other Areas

⚠ indicates safety critical components.

PARTS LIST

× New Parts
Parts without Parts No. are not supplied.
Les articles non mentionnes dans le Parts No. ne sont pas fournis.
Teile ohne Parts No. werden nicht geliefert.

Ref. No. 参照番号	Address 位置	New Parts 新	Parts No. 部品番号	Description 部品名／規格	Destination 仕向	Remarks 備考
C58			CK73FB1H223KTA	CHIP C 0.022UF K		
C59 ,60			CE04CW1A101M	ELECTRO 100UF 10WV		
C62			CK73FB1H223KTA	CHIP C 0.022UF K		
C63			CK73FB1H222K	CHIP C 2200PF K		
C64			CK73FB1H102K	CHIP C 1000PF K		
C65			CC73FCH1H101J	CHIP C 100PF J		
C66			CK73FB1H103K	CHIP C 0.010UF K		
C67			CE04CW1A101M	ELECTRO 100UF 10WV		
C68			CK73FB1H472K	CHIP C 4700PF K		
C69			CE04CW1A101M	ELECTRO 100UF 10WV		
C70			CK73FB1H122K	CHIP C 1200PF K		
C71			CK73FB1H221K	CHIP C 220PF K		
C72 ,73			CK73FB1H561K	CHIP C 560PF K		
C74			CE04CW1A101M	ELECTRO 100UF 10WV		
C75			CK73EB1H104K	CHIP C 0.10UF K		
C76 ,77			CK73EB1H473K	CHIP C 0.047UF K		
C78 ,79			CE04CW1A101M	ELECTRO 100UF 10WV		
C80			CE04CW1C470M	ELECTRO 47UF 16WV		
C81			CK73FB1H103K	CHIP C 0.010UF K		
C82			CK73EB1H683K	CHIP C 0.068UF K		
C83			CK73FB1H223KTA	CHIP C 0.022UF K		
C84			CK73EB1H223K	CHIP C 0.022UF K		
C85			CE04CW1C470M	ELECTRO 47UF 16WV		
C86			CK73EB1H223K	CHIP C 0.022UF K		
C87			CE04CW1C470M	ELECTRO 47UF 16WV		
C88 ,89			CK73FB1H183KTA	CHIP C 0.018UF K		
C90 ,91			CE04CW1V4R7M	ELECTRO 4.7UF 35WV		
C92 ,93			CE04CW1C100M	ELECTRO 10UF 16WV		
C94 ,95			CK73EB1H223K	CHIP C 0.022UF K		
C96 ,97			CK73FB1H822K	CHIP C 8200PF K		
C98 ,99			CK73EB1E154K	CHIP C 0.15UF K		
C100,101			CE04CW1HR22M	ELECTRO 0.22UF 50WV		
C102,103			CK73EB1H333K	CHIP C 0.033UF K		
C104,105			CK73FB1H562K	CHIP C 5600PF K		
C106,107			CE04CW1C100M	ELECTRO 10UF 16WV		
C108,109			CK73FB1H102K	CHIP C 1000PF K		
C110,111			CE04CW1C100M	ELECTRO 10UF 16WV		
C112,113			CK73FB1H102K	CHIP C 1000PF K		
C114,115			CE04CW1C100M	ELECTRO 10UF 16WV		
C116,117			C93-1044-05	CERAMIC 2200PF K		
C118-121			CE04CW1C100M	ELECTRO 10UF 16WV		
C122,123			C93-1044-05	CERAMIC 2200PF K		
C124,125			CE04CW1C100M	ELECTRO 10UF 16WV		
C126,127			CE04CW1C470M	ELECTRO 47UF 16WV		
C128,129			CE04CW1C100M	ELECTRO 10UF 16WV		
C130-137			CK73EB1E224K	CHIP C 0.22UF K		
-			E23-0151-04	EARTH LUG		
CN1	2D		E58-0822-05	RECTANGULAR RECEPTACLE		
CN2	2D		E40-9333-05	FLAT CABLE CONNCTOR		
CN3	3D		E58-0828-05	RECTANGULAR RECEPTACLE		
CN4			E40-3239-05	PIN ASSY		
312	1D		F01-1434-03	HEAT SINK (for POWER ICs)		
L1 -3			L40-4791-17	SMALL FIXED INDUCTOR (4.7UH,K)		

L:Scandinavia **K**:USA **P**:Canada **R**:Mexico
Y:PX(Far East, Hawaii) **T**:England **E**:Europe **G**:Germany
Y:AAFES(Europe) **X**:Australia **M**:Other Areas

⚠ indicates safety critical components.

KDC-8020R

PARTS LIST

× New Parts
Parts without Parts No. are not supplied.
Les articles non mentionnes dans le Parts No. ne sont pas fournis.
Teile ohne Parts No. werden nicht geliefert.

Ref. No. 参照番号	Address 位置	New Parts 新	Parts No. 部品番号	Description 部品名／規格	Destination 仕向	Remarks 備考
L4			L40-1011-17	SMALL FIXED INDUCTOR (100UH)		
L5 ,6			L40-4791-17	SMALL FIXED INDUCTOR (4.7UH,K)		
L7			L79-0914-05	LC FILTER		
L8 -10			L92-0302-05	CHIP FERRITE		
X1			L77-2003-05	CRYSTAL RESONATOR (8.388608MHz		
X2			L78-0530-05	RESONATOR (4.00MHz)		
X3			L77-2002-05	CRYSTAL RESONATOR (4.3320MHz)		
X4			L77-1166-05	CRYSTAL RESONATOR (7.2MHz)		
H	2D		N30-3004-46	PAN HEAD MACHINE SCREW		
J	1D		N30-3025-46	PAN HEAD MACHINE SCREW		
K	2D		N83-3006-46	PAN HEAD TAPTITE SCREW		
L	2D		N30-2604-46	PAN HEAD MACHINE SCREW		
R1			RK73FB2A223J	CHIP R 22K J 1/10W		
R2			RK73EB2B102J	CHIP R 1.0K J 1/8W		
R3			RK73FB2A223J	CHIP R 22K J 1/10W		
R4			R92-2063-05	CHIP R 680 J 1/2W		
R5			RK73EB2B221J	CHIP R 220 J 1/8W		
R6			RK73FB2A432J	CHIP R 4.3K J 1/10W		
R7 ,8			RK73FB2A473J	CHIP R 47K J 1/10W		
R9			RK73FB2A472J	CHIP R 4.7K J 1/10W		
R10			RK73FB2A102J	CHIP R 1.0K J 1/10W		
R11			R92-2104-05	CHIP R 2.2 J 1W		
R12 ,13			RK73EB2B392J	CHIP R 3.9K J 1/8W		
R14			RK73EB2B563J	CHIP R 56K J 1/8W		
R15			R92-0366-05	CHIP R 560 J 1W		
R16			RK73FB2A822J	CHIP R 8.2K J 1/10W		
R17			RK73FB2A473J	CHIP R 47K J 1/10W		
R18			RK73FB2A222J	CHIP R 2.2K J 1/10W		
R19			RK73FB2A223J	CHIP R 22K J 1/10W		
R20			RK73FB2A104J	CHIP R 100K J 1/10W		
R21			RK73FB2A473J	CHIP R 47K J 1/10W		
R22			RK73FB2A104J	CHIP R 100K J 1/10W		
R23			RK73FB2A473J	CHIP R 47K J 1/10W		
R24 -29			RK73FB2A102J	CHIP R 1.0K J 1/10W		
R30 ,31			RK73FB2A472J	CHIP R 4.7K J 1/10W		
R32			RK73EB2B224J	CHIP R 220K J 1/8W		
R33			RK73FB2A223J	CHIP R 22K J 1/10W		
R34			RK73EB2B333J	CHIP R 33K J 1/8W		
R35 ,36			RK73FB2A223J	CHIP R 22K J 1/10W		
R37 ,38			RK73FB2A222J	CHIP R 2.2K J 1/10W		
R39			RK73FB2A102J	CHIP R 1.0K J 1/10W		
R40			RK73EB2B223J	CHIP R 22K J 1/8W		
R41			RK73FB2A103J	CHIP R 10K J 1/10W		
R42			RK73EB2B102J	CHIP R 1.0K J 1/8W		
R43			RK73FB2A222J	CHIP R 2.2K J 1/10W		
R44 ,45			RK73FB2A102J	CHIP R 1.0K J 1/10W		
R46 ,47			RK73FB2A103J	CHIP R 10K J 1/10W		
R48 ,49			RK73FB2A102J	CHIP R 1.0K J 1/10W		
R50			RK73FB2A221J	CHIP R 220 J 1/10W		
R51 -53			RK73FB2A102J	CHIP R 1.0K J 1/10W		
R54			RK73FB2A104J	CHIP R 100K J 1/10W		
R55			RK73FB2A472J	CHIP R 4.7K J 1/10W		
R56			RK73FB2A104J	CHIP R 100K J 1/10W		
R57			RK73FB2A472J	CHIP R 4.7K J 1/10W		

L:Scandinavia K:USA P:Canada R:Mexico
Y:PX(Far East, Hawaii) T:England E:Europe G:Germany
Y:AAFES(Europe) X:Australia M:Other Areas

⚠ indicates safety critical components.

PARTS LIST

× New Parts
Parts without Parts No. are not supplied.
Les articles non mentionnes dans le Parts No. ne sont pas fournis.
Teile ohne Parts No. werden nicht geliefert.

Ref. No. 参照番号	Address 位置	New Parts 新	Parts No. 部品番号	Description 部品名／規格	Destination 仕向	Remarks 備考
R58			RK73FB2A102J	CHIP R 1.0K J 1/10W		
R59 ,60			RK73FB2A222J	CHIP R 2.2K J 1/10W		
R61 ,62			RK73FB2A102J	CHIP R 1.0K J 1/10W		
R63			RK73EB2B102J	CHIP R 1.0K J 1/8W		
R64 ,65			RK73FB2A222J	CHIP R 2.2K J 1/10W		
R66			RK73FB2A102J	CHIP R 1.0K J 1/10W		
R67 ,68			RK73FB2A103J	CHIP R 10K J 1/10W		
R69 ,70			RK73FB2A222J	CHIP R 2.2K J 1/10W		
R71			R92-2028-05	CHIP R 1K D 1/10W		
R72			RK73FB2A222J	CHIP R 2.2K J 1/10W		
R73			R92-2044-05	CHIP R 2.7K D 1/10W		
R74 ,75			RK73EB2B222J	CHIP R 2.2K J 1/8W		
R76 -80			RK73FB2A222J	CHIP R 2.2K J 1/10W		
R81			RK73EB2B103J	CHIP R 10K J 1/8W		
R82			RK73EB2B102J	CHIP R 1.0K J 1/8W		
R83			RK73EB2B103J	CHIP R 10K J 1/8W		
R84			RK73EB2B102J	CHIP R 1.0K J 1/8W		
R85			RK73EB2B221J	CHIP R 220 J 1/8W		
R86 -88			RK73FB2A102J	CHIP R 1.0K J 1/10W		
R89 ,90			RK73FB2A223J	CHIP R 22K J 1/10W		
R91 -93			RK73EB2B102J	CHIP R 1.0K J 1/8W		
R94			RK73FB2A102J	CHIP R 1.0K J 1/10W		
R95			RK73FB2A222J	CHIP R 2.2K J 1/10W		
R96			RK73EB2B102J	CHIP R 1.0K J 1/8W		
R97 ,98			RK73FB2A473J	CHIP R 47K J 1/10W		
R99			RK73EB2B223J	CHIP R 22K J 1/8W		
R100,101			RK73FB2A222J	CHIP R 2.2K J 1/10W		
R102			RK73EB2B103J	CHIP R 10K J 1/8W		
R103			RK73FB2A222J	CHIP R 2.2K J 1/10W		
R104,105			RK73FB2A473J	CHIP R 47K J 1/10W		
R106,107			RK73FB2A103J	CHIP R 10K J 1/10W		
R117-119			RK73FB2A104J	CHIP R 100K J 1/10W		
R120			RK73FB2A103J	CHIP R 10K J 1/10W		
R122,123			RK73FB2A104J	CHIP R 100K J 1/10W		
R124			RK73FB2A222J	CHIP R 2.2K J 1/10W		
R125			RK73EB2B221J	CHIP R 220 J 1/8W		
R126			RK73FB2A822J	CHIP R 8.2K J 1/10W		
R127			RK73FB2A163J	CHIP R 16K J 1/10W		
R128			RK73FB2A103J	CHIP R 10K J 1/10W		
R129			RK73FB2A223J	CHIP R 22K J 1/10W		
R130			RK73FB2A301J	CHIP R 300 J 1/10W		
R131			RK73EB2B331J	CHIP R 330 J 1/8W		
R132			RK73FB2A470J	CHIP R 47 J 1/10W		
R133			RK73FB2A822J	CHIP R 8.2K J 1/10W		
R134			RK73FB2A223J	CHIP R 22K J 1/10W		
R135			RK73FB2A562J	CHIP R 5.6K J 1/10W		
R136,137			RK73FB2A102J	CHIP R 1.0K J 1/10W		
R138			RK73EB2B100J	CHIP R 10 J 1/8W		
R139			RK73EB2B2R2J	CHIP R 2.2 J 1/8W		
R140			RK73EB2B220J	CHIP R 22 J 1/8W		
R141			RK73FB2A104J	CHIP R 100K J 1/10W		
R142,143			RK73FB2A103J	CHIP R 10K J 1/10W		
R144			RK73FB2A104J	CHIP R 100K J 1/10W		
R145			RK73FB2A103J	CHIP R 10K J 1/10W		
R146			RK73FB2A223J	CHIP R 22K J 1/10W		

L:Scandinavia **K:**USA **P:**Canada **R:**Mexico
Y:PX(Far East, Hawaii) **T:**England **E:**Europe **G:**Germany
Y:AAFES(Europe) **X:**Australia **M:**Other Areas

⚠ indicates safety critical components.

KDC-8020R

PARTS LIST

× New Parts
Parts without Parts No. are not supplied.
Les articles non mentionnes dans le Parts No. ne sont pas fournis.
Teile ohne Parts No. werden nicht geliefert.

Ref. No. 参照番号	Address 位置	New Parts 新	Parts No. 部品番号	Description 部品名／規格	Destination 仕向	Remarks 備考
R147			RK73FB2A103J	CHIP R 10K J 1/10W		
R148			RK73FB2A102J	CHIP R 1.0K J 1/10W		
R149			RK73FB2A822J	CHIP R 8.2K J 1/10W		
R150			RK73FB2A752J	CHIP R 7.5K J 1/10W		
R151			RK73FB2A562J	CHIP R 5.6K J 1/10W		
R152			RK73FB2A104J	CHIP R 100K J 1/10W		
R153			RK73FB2A332J	CHIP R 3.3K J 1/10W		
R154			RK73FB2A221J	CHIP R 220 J 1/10W		
R155			RK73FB2A752J	CHIP R 7.5K J 1/10W		
R156			RK73FB2A912J	CHIP R 9.1K J 1/10W		
R157			RK73FB2A473J	CHIP R 47K J 1/10W		
R158,159			RK73EB2B223J	CHIP R 22K J 1/8W		
R160,161			RK73EB2B102J	CHIP R 1.0K J 1/8W		
R162-179			RK73FB2A102J	CHIP R 1.0K J 1/10W		
R180,181			RK73FB2A473J	CHIP R 47K J 1/10W		
R182			RK73FB2A103J	CHIP R 10K J 1/10W		
R183			RK73FB2A102J	CHIP R 1.0K J 1/10W		
R184			RK73FB2A103J	CHIP R 10K J 1/10W		
R186,187			RK73FB2A104J	CHIP R 100K J 1/10W		
R188,189			RK73FB2A203J	CHIP R 20K J 1/10W		
R190,191			RK73FB2A222J	CHIP R 2.2K J 1/10W		
R192,193			RK73FB2A183J	CHIP R 18K J 1/10W		
R194,195			RK73FB2A472J	CHIP R 4.7K J 1/10W		
R196,197			RK73FB2A183J	CHIP R 18K J 1/10W		
R198,199			RK73FB2A472J	CHIP R 4.7K J 1/10W		
R200,201			RK73FB2A681J	CHIP R 680 J 1/10W		
R202,203			RK73FB2A392J	CHIP R 3.9K J 1/10W		
R204,205			RK73FB2A223J	CHIP R 22K J 1/10W		
R206,207			RK73FB2A681J	CHIP R 680 J 1/10W		
R208,209			RK73FB2A392J	CHIP R 3.9K J 1/10W		
R210,211			RK73FB2A223J	CHIP R 22K J 1/10W		
R212,213			RK73FB2A102J	CHIP R 1.0K J 1/10W		
R214-217			RK73FB2A681J	CHIP R 680 J 1/10W		
R218,219			RK73FB2A472J	CHIP R 4.7K J 1/10W		
R220-227			RK73EB2B2R2J	CHIP R 2.2 J 1/8W		
R228-236			RK73FB2A102J	CHIP R 1.0K J 1/10W		
R238,239			RK73FB2A622J	CHIP R 6.2K J 1/10W		
VR1			R12-3100-05	TRIMMING PØT.(10K タテ) (FM SD)		
D1			RL254	DIØDE		
D2 ,3			AM01Z	DIØDE		
D2 ,3			ERA15-01	DIØDE		
D4			MA8082-M	ZENER DIØDE		
D5			RD11JS(B2)	ZENER DIØDE		
D6			AM01Z	DIØDE		
D6			ERA15-01	DIØDE		
D7			MA110	DIØDE		
D7			1SS355	DIØDE		
D8			DA204K	DIØDE		
D9 ,10			MA8062-M	ZENER DIØDE		
D11			1SS184	DIØDE		
D12 ,13			MA110	DIØDE		
D12 ,13			1SS355	DIØDE		
D14 ,15			DA204K	DIØDE		
D17			MA110	DIØDE		

L:Scandinavia **K:**USA **P:**Canada **R:**Mexico
Y:PX(Far East, Hawaii) **T:**England **E:**Europe **G:**Germany
Y:AAFES(Europe) **X:**Australia **M:**Other Areas

⚠ indicates safety critical components.

PARTS LIST

* New Parts
Parts without Parts No. are not supplied.
Les articles non mentionnes dans le Parts No. ne sont pas fournis.
Teile ohne Parts No. werden nicht geliefert.

Ref. No. 参照番号	Address 位置	New Parts 新	Parts No. 部品番号	Description 部品名／規格	Destination 仕向	Remarks 備考
D17			1SS355	DIODE		
D18 -20			1SS184	DIODE		
D21			MA110	DIODE		
D21			1SS355	DIODE		
D22 -24			1SS181	DIODE		
D25 -27			DA204K	DIODE		
D28			MA110	DIODE		
D28			1SS355	DIODE		
D30 ,31			1SS181	DIODE		
D33 ,34			RD5.6JS(B2)	ZENER DIODE		
IC1			M5278D05	IC(VOLTAGE REGULATOR)		
IC2			M5237ML	IC(VOLTAGE REGULATOR)		
IC3			S-80740AN-D4	IC		
IC4		*	M38067MCD155FP	MI-COM IC		
IC5			LC3564QM-10	IC		
IC6			TC74HC02AF	IC		
IC7			KKZ02F	MOS-IC		
IC8			SAA6579T	IC		
IC9			LM7001M	ANALOGUE IC		
IC10			TC4W66F	IC		
IC11,12			NJM4565MD	IC(OP AMP X2)		
IC14			TEA6320T	ANALOGUE IC		
IC15,16	2D		AN7190K	ANALOGUE IC		
Q1			DTC124EK	DIGITAL TRANSISTOR		
Q1			XDC124EK	DIGITAL TRANSISTOR		
Q2			2SB1277	TRANSISTOR		
Q3			DTC124EK	DIGITAL TRANSISTOR		
Q3			XDC124EK	DIGITAL TRANSISTOR		
Q4			2SA1428	TRANSISTOR		
Q5			2SB1565F(E,F)	TRANSISTOR		
Q7			2SD2396F40	TRANSISTOR		
Q8			2SB1565F(E,F)	TRANSISTOR		
Q9			2SC2412K	TRANSISTOR		
Q10			2SB1277	TRANSISTOR		
Q11			2SA1037K	TRANSISTOR		
Q12			DTA124EK	DIGITAL TRANSISTOR		
Q12			XDA124EK	DIGITAL TRANSISTOR		
Q13 ,14			DTC124EK	DIGITAL TRANSISTOR		
Q13 ,14			XDC124EK	DIGITAL TRANSISTOR		
Q15			2SC2412K	TRANSISTOR		
Q16			DTC144EK	DIGITAL TRANSISTOR		
Q16			XDC144EK	DIGITAL TRANSISTOR		
Q19			DTA144EK	DIGITAL TRANSISTOR		
Q20			DTC124EK	DIGITAL TRANSISTOR		
Q20			XDC124EK	DIGITAL TRANSISTOR		
Q21			2SA1037K	TRANSISTOR		
Q22 ,23			DTA124EK	DIGITAL TRANSISTOR		
Q22 ,23			XDA124EK	DIGITAL TRANSISTOR		
Q24			2SB1326	TRANSISTOR		
Q25			DTC124EK	DIGITAL TRANSISTOR		
Q25			XDC124EK	DIGITAL TRANSISTOR		
Q26			2SB1326	TRANSISTOR		
Q27			DTC124EK	DIGITAL TRANSISTOR		
Q27			XDC124EK	DIGITAL TRANSISTOR		
Q28			DTA124EK	DIGITAL TRANSISTOR		

L:Scandinavia K:USA P:Canada R:Mexico
Y:PX(Far East, Hawaii) T:England E:Europe G:Germany
Y:AAFES(Europe) X:Australia M:Other Areas

⚠ indicates safety critical components.

KDC-8020R

PARTS LIST

× New Parts
Parts without Parts No. are not supplied.
Les articles non mentionnes dans le Parts No. ne sont pas fournis.
Teile ohne Parts No. werden nicht geliefert.

Ref. No. 参照番号	Address 位置	New Parts 新	Parts No. 部品番号	Description 部品名／規格	Destination 仕向	Remarks 備考
Q28			XDA124EK	DIGITAL TRANSISTOR		
Q29			DTC144EK	DIGITAL TRANSISTOR		
Q29			XDC144EK	DIGITAL TRANSISTOR		
Q30			DTC124EK	DIGITAL TRANSISTOR		
Q30			XDC124EK	DIGITAL TRANSISTOR		
Q31			2SA1362(Y)	TRANSISTOR		
Q32 ,33			DTC144EK	DIGITAL TRANSISTOR		
Q32 ,33			XDC144EK	DIGITAL TRANSISTOR		
Q34			2SA1362(Y)	TRANSISTOR		
Q35			2SK536	FET		
Q36			DTC144EK	DIGITAL TRANSISTOR		
Q36			XDC144EK	DIGITAL TRANSISTOR		
Q37			2SA1037K	TRANSISTOR		
Q38			2SK536	FET		
Q39			DTC144EK	DIGITAL TRANSISTOR		
Q39			XDC144EK	DIGITAL TRANSISTOR		
Q40 ,41			2SC2412K	TRANSISTOR		
Q42			DTC144EK	DIGITAL TRANSISTOR		
Q42			XDC144EK	DIGITAL TRANSISTOR		
Q43			2SA1037K	TRANSISTOR		
Q44			DTC114TK	DIGITAL TRANSISTOR		
Q45			DTA124EK	DIGITAL TRANSISTOR		
Q45			XDA124EK	DIGITAL TRANSISTOR		
Q46 ,47			2SB1277	TRANSISTOR		
Q48 ,49			DTC124EK	DIGITAL TRANSISTOR		
Q48 ,49			XDC124EK	DIGITAL TRANSISTOR		
Q50 ,51			DTA124EK	DIGITAL TRANSISTOR		
Q50 ,51			XDA124EK	DIGITAL TRANSISTOR		
Q52 ,53			2SD2114K	TRANSISTOR		
Q54 -57			2SD2114K	TRANSISTOR		
TH1			NTH4G42B104E01	THERMISTOR (100K)		
TU1	2D	*	W02-1446-05	FM/AM FRONT-END		
CD PLAYER UNIT (X32-4010-00)						
D5 -8			B30-1426-05	LED		
C1			CK73EB1E104K	CHIP C 0.10UF K		
C2 ,3			CK73EB1C105K	CHIP C 1.0UF K		
C4			C92-1020-05	ELECTRO 10UF 6.3WV		
C5			C92-0012-05	CHIP TAN 22UF 6.3WV		
C6			CC73FCH1H020C	CHIP C 2.0PF C		
C7			CK73EB1E104K	CHIP C 0.10UF K		
C8			CK73EB1C105K	CHIP C 1.0UF K		
C9			CC73FCH1H101J	CHIP C 100PF J		
C10			CK73FB1H682K	CHIP C 6800PF K		
C11 ,12			CK73FB1H222K	CHIP C 2200PF K		
C13			CK73EB1E273K	CHIP C 0.027UF K		
C14 ,15			CK73EB1E104K	CHIP C 0.10UF K		
C16			CK73FB1H472K	CHIP C 4700PF K		
C17			CK73FB1E473KTA	CHIP C 0.047UF K		
C18			CC73FCH1H151J	CHIP C 150PF J		
C19			CC73FCH1H471J	CHIP C 470PF J		
C20			CK73EB1C105K	CHIP C 1.0UF K		
C21			CK73EB1H102K	CHIP C 1000PF K		
C22 ,23			CK73EB1H223K	CHIP C 0.022UF K		

L:Scandinavia K:USA P:Canada R:Mexico
Y:PX(Far East, Hawaii) T:England E:Europe G:Germany
Y:AAFES(Europe) X:Australia M:Other Areas

⚠ indicates safety critical components.

× New Parts
Parts without **Parts No.** are not supplied.
Les articles non mentionnes dans le **Parts No.** ne sont pas fournis.
Teile ohne **Parts No.** werden nicht geliefert.

Ref. No. 参照番号	Address 位置	New Parts 新	Parts No. 部品番号	Description 部品名／規格	Destination 仕向	Remarks 備考
C24			CK73EB1C334K	CHIP C 0.33UF K		
C25			CK73EB1H102K	CHIP C 1000PF K		
C31 ,32			CK73FB1E473KTA	CHIP C 0.047UF K		
C33			CK73EB1E104K	CHIP C 0.10UF K		
C34			CK73FB1H103K	CHIP C 0.010UF K		
C35 ,36			CC73FCH1H100D	CHIP C 10PF D		
C37 ,38			CK73EB1E104K	CHIP C 0.10UF K		
C41 ,42			CK73FB1H103K	CHIP C 0.010UF K		
C43 ,44			CK73FB1H471K	CHIP C 470PF K		
C45 ,46			CC73FCH1H820J	CHIP C 82PF J		
C47 ,48			CK73FB1H222K	CHIP C 2200PF K		
C50 ,51			C92-1019-05	ELECTRO 4.7UF 16WV		
C52 ,53			C92-1020-05	ELECTRO 10UF 6.3WV		
C55			CK73EB1C105K	CHIP C 1.0UF K		
C60			C92-1019-05	ELECTRO 4.7UF 16WV		
C61			CK73FB1H223KTA	CHIP C 0.022UF K		
C62			CK73EB1H223K	CHIP C 0.022UF K		
C63			CK73FB1H223KTA	CHIP C 0.022UF K		
C66			CK73EB1E184K	CHIP C 0.18UF K		
C67			CK73EB1C394K	CHIP C 0.39UF K		
C69			CK73EB1E104K	CHIP C 0.10UF K		
C70			CK73EB1C105K	CHIP C 1.0UF K		
CN1			E40-9337-05	FLAT CABLE CONNCTOR		
CN2			E40-9338-05	FLAT CABLE CONNCTOR		
L1			L40-1001-31	SMALL FIXED INDUCTOR (10UH)		
L2 -4			L33-0916-05	SMALL FIXED INDUCTOR (4.7UH)		
X1			L77-2011-15	CRYSTAL RESONATOR (16.9344MHz)		
X2			L78-0528-05	RESONATOR (8.38MHz)		
R1			RK73FB2A820J	CHIP R 82 J 1/10W		
R2			RK73EB2B100J	CHIP R 10 J 1/8W		
R3 ,4			RK73FB2A124J	CHIP R 120K J 1/10W		
R5 -8			RK73FB2A333J	CHIP R 33K J 1/10W		
R9			RK73FB2A153J	CHIP R 15K J 1/10W		
R10			RK73FB2A824J	CHIP R 820K J 1/10W		
R11			RK73FB2A223J	CHIP R 22K J 1/10W		
R12			RK73FB2A393J	CHIP R 39K J 1/10W		
R13			RK73FB2A273J	CHIP R 27K J 1/10W		
R14			RK73FB2A104J	CHIP R 100K J 1/10W		
R15			RK73FB2A394J	CHIP R 390K J 1/10W		
R20			RK73FB2A104J	CHIP R 100K J 1/10W		
R21			RK73EB2B105J	CHIP R 1.0M J 1/8W		
R22			RK73FB2A124J	CHIP R 120K J 1/10W		
R23			RK73FB2A104J	CHIP R 100K J 1/10W		
R24			RK73FB2A681J	CHIP R 680 J 1/10W		
R25			RK73EB2B102J	CHIP R 1.0K J 1/8W		
R26			RK73FB2A104J	CHIP R 100K J 1/10W		
R30			RK73EB2B753J	CHIP R 75K J 1/8W		
R31			RK73FB2A102J	CHIP R 1.0K J 1/10W		
R32			RK73FB2A4R7J	CHIP R 4.7 J 1/10W		
R35 ,36			RK73FB2A183J	CHIP R 18K J 1/10W		
R37 ,38			RK73FB2A103J	CHIP R 10K J 1/10W		
R39 ,40			RK73FB2A123J	CHIP R 12K J 1/10W		
R41 ,42			RK73FB2A103J	CHIP R 10K J 1/10W		

L:Scandinavia **K:**USA **P:**Canada **R:**Mexico
Y:PX(Far East, Hawaii) **T:**England **E:**Europe **G:**Germany
Y:AAFES(Europe) **X:**Australia **M:**Other Areas

⚠ indicates safety critical components.

KDC-8020R

PARTS LIST

× New Parts
Parts without Parts No. are not supplied.
Les articles non mentionnes dans le Parts No. ne sont pas fournis.
Teile ohne Parts No. werden nicht geliefert.

Ref. No. 参照番号	Address 位置	New Parts 新	Parts No. 部品番号	Description 部品名／規格	Destination 仕向	Remarks 備考
R43 ,44			RK73EB2B681J	CHIP R 680 J 1/8W		
R45			RK73FB2A561J	CHIP R 560 J 1/10W		
R46			RK73FB2A102J	CHIP R 1.0K J 1/10W		
R47			RK73FB2A681J	CHIP R 680 J 1/10W		
R48			RK73FB2A202J	CHIP R 2.0K J 1/10W		
R50			RK73FB2A241J	CHIP R 240 J 1/10W		
R51			RK73FB2A333J	CHIP R 33K J 1/10W		
R52			RK73EB2B472J	CHIP R 4.7K J 1/8W		
R53			RK73FB2A472J	CHIP R 4.7K J 1/10W		
R54			RK73FB2A103J	CHIP R 10K J 1/10W		
R55			RK73EB2B102J	CHIP R 1.0K J 1/8W		
R56			RK73EB2B223J	CHIP R 22K J 1/8W		
R57			RK73EB2B104J	CHIP R 100K J 1/8W		
R58			RK73FB2A223J	CHIP R 22K J 1/10W		
R59 ,60			RK73FB2A104J	CHIP R 100K J 1/10W		
R61 ,62			RK73EB2B472J	CHIP R 4.7K J 1/8W		
R63			RK73EB2B102J	CHIP R 1.0K J 1/8W		
R64			RK73FB2A472J	CHIP R 4.7K J 1/10W		
R65			RK73FB2A752J	CHIP R 7.5K J 1/10W		
R66			RK73FB2A102J	CHIP R 1.0K J 1/10W		
R67			RK73FB2A223J	CHIP R 22K J 1/10W		
R68			RK73FB2A183J	CHIP R 18K J 1/10W		
R69			RK73FB2A334J	CHIP R 330K J 1/10W		
R71			RK73EB2B223J	CHIP R 22K J 1/8W		
R72			RK73EB2B562J	CHIP R 5.6K J 1/8W		
R73			RK73FB2A103J	CHIP R 10K J 1/10W		
R74			RK73FB2A102J	CHIP R 1.0K J 1/10W		
R75			RK73FB2A683J	CHIP R 68K J 1/10W		
R80			RK73FB2A224J	CHIP R 220K J 1/10W		
R81			RK73FB2A563J	CHIP R 56K J 1/10W		
R82			RK73FB2A683J	CHIP R 68K J 1/10W		
R83			RK73FB2A102J	CHIP R 1.0K J 1/10W		
R84			RK73EB2B223J	CHIP R 22K J 1/8W		
R85			RK73FB2A104J	CHIP R 100K J 1/10W		
R86			RK73FB2A154J	CHIP R 150K J 1/10W		
R90			RK73EB2B471J	CHIP R 470 J 1/8W		
R91			RK73EB2B331J	CHIP R 330 J 1/8W		
R92			RK73FB2A222J	CHIP R 2.2K J 1/10W		
W1 -47			R92-2053-05	CHIP R 0 J 1/8W		
W49 -53			R92-2053-05	CHIP R 0 J 1/8W		
W81 -86			R92-2052-05	CHIP R 0 J 1/10W		
S1 ,2			S40-1139-05	PUSH SWITCH		
D1			MA110	DIODE		
D1			1SS355	DIODE		
D4			MA8091	ZENER DIODE		
IC1			AN8806SB	ANALOGUE IC		
IC2			MN662720RB	MOS-IC		
IC3			SM5873BS	MOS-IC		
IC4			NJM4565MD	IC(OP AMP X2)		
IC5			TA78L05F	IC(5V VOLTAGE REGULATOR)		
IC6			78002BGC603-AB8	MI-COM IC		
IC7			BA6795FP	ANALOGUE IC		
IC8			NJM4565MD	IC(OP AMP X2)		

L:Scandinavia **K:**USA **P:**Canada **R:**Mexico
Y:PX(Far East, Hawaii) **T:**England **E:**Europe **G:**Germany
Y:AAFES(Europe) **X:**Australia **M:**Other Areas

⚠ indicates safety critical components.

PARTS LIST

× New Parts
Parts without Parts No. are not suppiled.
Les articles non mentionnes dans le Parts No. ne sont pas fournis.
Teile ohne Parts No. werden nicht gellefert.

Ref. No. 参照番号	Address 位置	New Parts 新	Parts No. 部品番号	Description 部品名／規格	Destination 仕向	Remarks 備考
PH1 -4			PT461T	PHOTO TRANSISTOR		
Q1			2SA1362	TRANSISTOR		
Q2 ,3			DTC124EK	DIGITAL TRANSISTOR		
Q2 ,3			XDC124EK	DIGITAL TRANSISTOR		
Q4			2SD1624	TRANSISTOR		
Q5			2SA1362	TRANSISTOR		
Q6			2SA1037K	TRANSISTOR		
TH1			NTH5G40B333K01	THERMISTOR		
MECHANISM ASS'Y (X92-3010-00)						
1	2A	*	A10-2261-53	CHASSIS CALKING ASSY		
2	1A		A10-2264-03	CHASSIS		
5	2B		D10-2806-03	LEVER		
6	3B		D10-2807-24	LEVER		
7	3B		D10-2808-24	LEVER		
8	2A		D10-2809-14	LEVER		
9	3B	*	D10-2936-04	LEVER ASSY		
10	3B		D10-2811-03	LEVER		
11	3A		D10-2812-24	LEVER		
12	3A		D10-2813-24	LEVER		
13	3B	*	D10-2814-13	SLIDER		
14	3A	*	D10-2815-14	SLIDER		
15	2B	*	D10-2816-23	SLIDER		
17	2B	*	D10-2818-24	LEVER ASSY		
19	2B		D10-2820-04	ARM ASSY		
21	2A		D13-1114-04	WORM		
22	2A		D13-1115-04	GEAR		
23	2B		D13-1116-04	GEAR		
24	2B		D13-1117-13	GEAR		
25	2B		D13-1118-04	GEAR		
26	2B		D13-1119-04	GEAR		
27	2A		D13-1120-04	GEAR		
28	2B		D13-1121-04	GEAR		
29	2B		D13-1122-04	GEAR		
30	2B		D13-1123-04	GEAR		
31	2B	*	D13-1124-23	GEAR		
32	2B		D13-1144-14	GEAR		
33	2B	*	D14-0636-14	ROLLER		
34	2A		D21-2138-34	SHAFT		
35	2A		D21-2139-24	SHAFT		
36	2B		D21-2140-14	SHAFT		
38	2B		D23-0912-04	RETAINER		
39	2B		D23-0913-04	RETAINER		
40	1A,1B		D39-0214-13	DAMPER		
42	2A		G01-2656-14	EXTENSION SPRING		
43	1A,1B		G01-2662-04	EXTENSION SPRING		
44	1B		G01-2663-14	EXTENSION SPRING		
45	1B		G01-2664-14	EXTENSION SPRING		
46	2B		G01-2665-14	EXTENSION SPRING		
47	3B		G01-2666-04	EXTENSION SPRING		
48	3B		G01-2679-04	TORSION COIL SPRING		
49	3B	*	G02-1162-24	FLAT SPRING		
50	2A		G02-1163-04	FLAT SPRING ASSY		
51	2B		G02-1156-04	FLAT SPRING		
53	2A		G02-1184-14	FLAT SPRING		

L:Scandinavia K:USA P:Canada R:Mexico
Y:PX(Far East, Hawaii) T:England E:Europe G:Germany
Y:AAFES(Europe) X:Australia M:Other Areas

⚠ indicates safety critical components.

KDC-8020R

PARTS LIST

× New Parts
Parts without Parts No. are not supplied.
Les articles non mentionnes dans le Parts No. ne sont pas fournis.
Teile ohne Parts No. werden nicht geliefert.

Ref. No. 参照番号	Address 位置	New Parts 新	Parts No. 部品番号	Description 部品名／規格	Destination 仕向	Remarks 備考
54	1B	*	G02-1169-14	FLAT SPRING ASSY		
55	1B		J11-0605-03	CLAMPER		
57	3A	*	J19-4519-23	HOLDER		
58	1B	*	J19-4564-04	HOLDER ASSY		
59	1A,1B		J19-4521-03	HOLDER		
61	1A		J21-7457-13	MOUNTING HARDWARE		
62	2A		J21-7458-14	MOUNTING HARDWARE		
63	1A,1B		J21-7459-04	MOUNTING HARDWARE		
64	3B	*	J21-7460-13	MOUNTING HARDWARE		
65	1A		J21-7461-13	MOUNTING HARDWARE		
66	2B		J21-7462-24	MOUNTING HARDWARE ASSY		
68	2B		J90-0731-22	GUIDE		
69	2B	*	J90-0732-13	GUIDE		
70	2B		J90-0733-04	GUIDE		
73	2B		W10-0704-04	PRISM		
FC1	3A		E39-0055-05	FLAT CABLE		
A	1A,2A		N09-4093-05	MACHINE SCREW (2X3.5)		
B	1B		N39-2020-46	PAN HEAD MACHIN SCREW		
C	2A		N39-1722-46	PAN HEAD MACHIN SCREW		
D	2B		N19-2022-04	FLAT WASHER		
E	1A,3B		N39-2025-46	PAN HEAD MACHIN SCREW		
F	3A	*	N09-4120-05	TAPTITE SCREW (2X3.5)		
M1	2A		T42-0727-24	MOTOR ASSY		
M2 ,3	2A		T42-0731-05	DC MOTOR		
PU1	2A		T25-0204-05	OPTICAL PICKUP HEAD		

L:Scandinavia **K**:USA **P**:Canada **R**:Mexico
Y:PX(Far East, Hawaii) **T**:England **E**:Europe **G**:Germany
Y:AAFES(Europe) **X**:Australia **M**:Other Areas

⚠ indicates safety critical components.

KDC-8020R

SPECIFICATIONS

Specifications subject to change without notice.

Disc Section

Laser Diode	GaAlAs (λ=780 nm)
Digital Filter (D/A)	8 Times Over Sampling
D/A Converter	1 bit (with D.P.A.C)
Spindle Speed	500~200 rpm (CLV)
Wow & Flutter	Below Measurable Limit
Frequency Response	10 Hz ~ 20 kHz (±1 dB)
Total Harmonic Distortion	0.01 % (1 kHz)
Signal to Noise Ratio	93 dB
Dynamic Range	96 dB
Channel Separation	85 dB

FM tuner section

Frequency Range	87.5 MHz ~ 108.0 MHz
Channel Space	50 kHz
Usable Sensitivity (DIN)	0.9 μV/75 Ω
Quieting Sensitivity (S/N = 46 dB)	1.6 μV/75 Ω
Frequency Response (±3 dB)	30 Hz ~ 15 kHz
Signal to Noise Ratio	68 dB
Selectivity (DIN)	70 dB
19 kHz Carrier Leakage	65 dB
Stereo Separation	35 dB (1 kHz)

MW tuner section

Frequency Range	531 kHz ~ 1611 kHz
Usable Sensitivity	30 μV

LW tuner section

Frequency Range	153 kHz ~ 281 kHz
Usable Sensitivity	60 μV

Audio section

Maximum Power Output	25 W × 4
Power Output (4 Ω, 1 kHz, 10% THD)	20 W × 4
(4 Ω, 1 kHz, 1% THD)	15 W × 4
Tone Action	Bass: ±8 dB (100 Hz) Treble:±8 dB (10 kHz)
Preout Level	1.0 V (10 kΩ)

General

Operating Voltage	14.4 V (11 ~ 16 V)
Current Consumption	5.0 A
Operating Temperature	–10 ~ 50 °C
Installation Size (W × H × D)	182 × 52 × 163 mm
Weight	1.6 kg

Note:

Component and circuitry are subject to modification to insure best operation under differing local conditions. This manual is based on, the Europe (E) standard, and provides information on regional circuit modification through use of alternate schematic diagrams, and information on regional component variations through use of parts list.

KENWOOD CORPORATION
14-6, Dogenzaka 1-chome, Shibuya-ku, Tokyo, 150 Japan

KENWOOD SERVICE CORPORATION
P.O. BOX 22745, 2201 East Dominguez St., Long Beach, CA 90801-5745 U.S.A.

KENWOOD ELECTRONICS CANADA INC.
6070 Kestrel Road, Mississauga, Ontario, Canada L5T 1S8

KENWOOD ELECTRONICS LATIN AMERICA S.A.
P.O. BOX 55-2791, Piso 6 Plaza Chase, Cl. 47 y Aquilino de la Guardia, Panama, Republic de Panama

TRIO-KENWOOD U.K. LIMITED
KENWOOD House, Dwight Road, Watford, Herts, WD1 8EB United Kingdom

KENWOOD ELECTRONICS BENELUX N.V.
Mechelsesteenweg 418 B-1930 Zaventem, Belgium

KENWOOD ELECTRONICS DEUTSCHLAND GMBH
Rembrücker Str. 15, 63150 Heusenstamm, Germany

TRIO-KENWOOD FRANCE S.A.
13 Boulevard Ney, 75018 Paris, France

KENWOOD ELECTRONICS ITALIA S.p.A.
Via G. Sirtori, 7/9 20129 Milano, Italy

KENWOOD ESPAÑA S.A.
Bolivia, 239-08020 Barcelona, Spain

KENWOOD ELECTRONICS AUSTRALIA PTY. LTD. (A.C.N. 001 499 074)
P.O. BOX 504, 8 Figtree Drive, Australia Centre, Homebush, N.S.W. 2140, Australia

KENWOOD & LEE ELECTRONICS, LTD.
Unit 3712-3724, Level 37 Tower 1, Metroplaza, 223 Hing Fong Road, Kwai Fong N.T. Hong Kong

KENWOOD ELECTRONICS SINGAPORE PTE LTD.
No. 1 Genting Lane # 07-00, KENWOOD Building, Singapore, 1334

KENWOOD ELECTRONICS (MALAYSIA) SDN BHD
10 th Floor, Block B, Wisma Semantan, No. 12, Jalan Gelenggang, Bukit Damansara, 50490 Kuala Lumpur, Malaysia